THE CITY OF
EL CERRITO
COMMUNITY DEVELOPMENT DEPARTMENT

Staff Liaison
Sean Moss | 510.215.4330
smoss@ci.el-cerrito.ca.us

AGENDA

REGULAR MEETING OF THE **PLANNING COMMISSION**

December 20, 2023 at 7:30 p.m.

City Council Chambers, El Cerrito City Hall
10890 San Pablo Avenue
El Cerrito, CA 94530

7:30 p.m. CONVENE REGULAR MEETING

1. ROLL CALL – Chair Joy Navarrete, Vice Chair Daniel Hamilton; Members Brendan Bloom, Erin Gillett, Leslie Mendez, Abhijeet Singh, and Nathan Tinclair

2. COUNCIL/STAFF LIAISON ANNOUNCEMENTS AND REPORTS
The City Council Liaison or City staff may report on matters of general interest to the Planning Commission, Council policies, priorities and significant actions taken by the City Council.

3. ORAL COMMUNICATIONS FROM THE PUBLIC
Remarks are typically limited to three minutes per person, and may be on anything within the subject matter jurisdiction of the body. Remarks on non-agenda items will be heard first, remarks on agenda items will be heard at the time the item is discussed.

4. ADOPTION OF THE 2024 REGULAR PLANNING COMMISSION MEETING SCHEDULE
Adoption of the regular meeting schedule for the 2024 calendar year.

5. ADOPTION OF MINUTES
Adoption of the November 15, 2023 meeting minutes.

6. COMMISSIONER COMMUNICATION/CONFLICT OF INTEREST DISCLOSURE
This time on the agenda is reserved for Commissioners to disclose communications from individuals regarding specific agenda items or to state a potential conflict of interest in relation to a specific agenda item.

7. CONDITIONAL USE PERMIT – 7211 VIEW DRIVE

Application:	PL23-0153
Applicant:	Ran Haimoff
Location:	7211 View Drive
APN:	505-021-010
Zoning:	RS-5 (Single Family Residential)
General Plan:	Low Density Residential
Request:	Planning Commission consideration of a Conditional Use Permit to allow expanding a nonconforming side setback (Chapter 19.27 and Chapter 19.34, ECMC).

CEQA: This project is categorically exempt from the provisions of CEQA pursuant to Section 15301 of the CEQA Guidelines, Class 1: Existing Facilities.

8. STAFF COMMUNICATIONS

Informational reports on matters of general interest, presented by City staff.

9. ADJOURNMENT

In compliance with the Americans with Disabilities Act, if you need special assistance to participate in this meeting, please contact Sean Moss at (510) 215-4330. Notification 48 hours prior to the meeting will enable the City to make reasonable arrangements to ensure accessibility to this meeting. (28 CFR 35.102-35.104 ADA Title I).

Any writings or documents provided to a majority of the members regarding any item on this agenda will be made available for public inspection.

2024 Regular Meeting Schedule

City Holiday/Closed

Regular Meeting

Location:

Council Chambers (10890 San Pablo Ave)

Meeting Time:

7:30 p.m.

Planning Commission

JANUARY 2024

Sun	Mon	Tue	Wed	Thur	Fri	Sat
	1	2	3	4	5	6
7	8	9	10	11	12	13
14	15	16	17	18	19	20
21	22	23	24	25	26	27
28	29	30	31			

FEBRUARY 2024

Sun	Mon	Tue	Wed	Thur	Fri	Sat
				1	2	3
4	5	6	7	8	9	10
11	12	13	14	15	16	17
18	19	20	21	22	23	24
25	26	27	28	29		

MARCH 2024

Sun	Mon	Tue	Wed	Thur	Fri	Sat
					1	2
3	4	5	6	7	8	9
10	11	12	13	14	15	16
17	18	19	20	21	22	23
24	25	26	27	28	29	30
31						

APRIL 2024

Sun	Mon	Tue	Wed	Thur	Fri	Sat
	1	2	3	4	5	6
7	8	9	10	11	12	13
14	15	16	17	18	19	20
21	22	23	24	25	26	27
28	29	30				

MAY 2024

Sun	Mon	Tue	Wed	Thur	Fri	Sat
			1	2	3	4
5	6	7	8	9	10	11
12	13	14	15	16	17	18
19	20	21	22	23	24	25
26	27	28	29	30	31	

JUNE 2024

Sun	Mon	Tue	Wed	Thur	Fri	Sat
						1
2	3	4	5	6	7	8
9	10	11	12	13	14	15
16	17	18	19	20	21	22
23	24	25	26	27	28	29
30						

JULY 2024

Sun	Mon	Tue	Wed	Thur	Fri	Sat
	1	2	3	4	5	6
7	8	9	10	11	12	13
14	15	16	17	18	19	20
21	22	23	24	25	26	27
28	29	30	31			

AUGUST 2024

Sun	Mon	Tue	Wed	Thur	Fri	Sat
				1	2	3
4	5	6	7	8	9	10
11	12	13	14	15	16	17
18	19	20	21	22	23	24
25	26	27	28	29	30	31

SEPTEMBER 2024

Sun	Mon	Tue	Wed	Thur	Fri	Sat
1	2	3	4	5	6	7
8	9	10	11	12	13	14
15	16	17	18	19	20	21
22	23	24	25	26	27	28
29	30					

OCTOBER 2024

Sun	Mon	Tue	Wed	Thur	Fri	Sat
		1	2	3	4	5
6	7	8	9	10	11	12
13	14	15	16	17	18	19
20	21	22	23	24	25	26
27	28	29	30	31		

NOVEMBER 2024

Sun	Mon	Tue	Wed	Thur	Fri	Sat
					1	2
3	4	5	6	7	8	9
10	11	12	13	14	15	16
17	18	19	20	21	22	23
24	25	26	27	28	29	30

DECEMBER 2024

Sun	Mon	Tue	Wed	Thur	Fri	Sat
1	2	3	4	5	6	7
8	9	10	11	12	13	14
15	16	17	18	19	20	21
22	23	24	25	26	27	28
29	30	31				

Adopted by the Advisory body on MM/DD/YYYY

THE CITY OF
EL CERRITO
COMMUNITY DEVELOPMENT DEPARTMENT

Staff Liaison
Sean Moss | 510.215.4330
smoss@ci.el-cerrito.ca.us

MINUTES

REGULAR MEETING OF THE **PLANNING COMMISSION**

November 15, 2023 at 7:30 p.m.

City Council Chambers, El Cerrito City Hall
10890 San Pablo Avenue
El Cerrito, CA 94530

7:30 p.m. CONVENE REGULAR MEETING

1. ROLL CALL – Chair Joy Navarrete, Members Erin Gillett, Leslie Mendez, and Nathan Tinclair. Vice Chair Daniel Hamilton had an excused absence. Commissioners Brendan Bloom and Abhijeet Singh were also absent.

2. COUNCIL/STAFF LIAISON ANNOUNCEMENTS AND REPORTS
No report was given.

3. ORAL COMMUNICATIONS FROM THE PUBLIC
No comments were received.

4. ADOPTION OF MINUTES
Moved/Second: Commissioners Mendez/Tinclair. **Action:** Passed a motion to adopt the September 20, 2023 meeting minutes.
Ayes: Gillett, Mendez, Navarrete, Tinclair.
Noes: None.
Abstain: None.
Absent: Bloom, Hamilton, Singh.

5. COMMISSIONER COMMUNICATION/CONFLICT OF INTEREST DISCLOSURE
Nothing was reported.

6. TIER IV DESIGN REVIEW AMENDMENT – 6115 POTRERO AVENUE

Application:	PL23-0043
Applicant:	Potrero Avenue Partners, LLC
Location:	11335 San Pablo Avenue, 6111 & 6115 Potrero Avenue
APN:	513-327-015, 513-327-018, 513-327-046
Zoning:	Transit Oriented Higher Intensity Mixed Use (TOHIMU)
General Plan:	Transit Oriented Higher Intensity Mixed Use (TOHIMU)
Request:	Planning Commission consideration of amendments to the conditions of approval with regard to noise attenuation, transportation demand management measures, and the timing of payment of open space in-lieu and public benefit contributions for a previously approved project containing 63 residential dwelling units and approximately 6,220 square feet of ground floor commercial space.

CEQA: This project is consistent with the Program Environmental Impact Report prepared for the San Pablo Avenue Specific Plan, pursuant to CEQA Guidelines Sections 15168(c). The project is also exempt from CEQA pursuant to CEQA Guidelines Section 15182 (Projects Pursuant to a Specific Plan), under subsection (b) (Projects Proximate to Transit).

Planning Manager Sean Moss presented the staff report and answered questions from the Commission.

Buddy Williams, representing the applicant, presented the project and answered questions from the Commission.

The public hearing was opened.

No speakers addressed the Commission.

The public hearing was closed.

Moved/Second: Commissioners Mendez/Navarrete. Action: Passed a motion to approve amendments to the conditions of approval with regard to noise attenuation, transportation demand management measures, and the timing of payment of open space in-lieu and public benefit contributions for a previously approved project at 11335 San Pablo Avenue, 6111 & 6115 Potrero Avenue with the modification that Conditions of Approval 24 & 31 be amended to read "…any Certificate of Occupancy…".
Ayes: Gillett, Mendez, Navarrete, Tinclair.
Noes: None.
Abstain: None.
Absent: Bloom, Hamilton, Singh.

7. STAFF COMMUNICATIONS

Planning Manager Sean Moss updated the Commission about the hiring of a Senior Planner.

8. ADJOURNMENT

8:00 p.m.

Community Development Department
Planning and Building Division
10890 San Pablo Avenue, El Cerrito, CA 94530
(510) 215-4330 | planning@ci.el-cerrito.ca.us

Planning Commission Staff Report

December 20, 2023

7211 View Ave – Conditional Use Permit

DETAILS

Application Number: PL23-0153

Applicant: Ran Haimoff

Location: 7211 View Ave

APN: 505-021-010

Zoning: RS-5 (Single Family Residential)

General Plan: Low Density Residential

Request: Planning Commission consideration of a Conditional Use Permit to allow a proposed addition to a single-family house that expands a nonconforming side setback (Chapter 19.27 and Chapter 19.34, ECMC).

CEQA: This project is categorically exempt from the provisions of CEQA pursuant to Section 15301 of the CEQA Guidelines, Class 1: Existing Facilities.

EXECUTIVE SUMMARY

The proposed project includes a 400 sq. ft. addition to an existing 1,783 sq. ft. single-family house which would result in a 2,183 sq. ft. house with four bedrooms, two and a half bathrooms, a living room, a dining room, and a kitchen.

The existing house has a non-conforming side setback of 4 foot 1 inches on the east side of the property. The proposed addition would extend the building along the nonconforming side setbacks and would not project further into the required 5-foot setback than the existing structure. Pursuant to ECMC Section 19.27.050, additions that extend a nonconforming setback require a Conditional Use Permit.

Based on the evidence and analysis contained in this report, staff recommends approval of the Conditional Use Permit.

Background

Site Location and Layout

The house at 7211 View Avenue is an approximately 1,783-square-foot single-story house. The house sits on a 7,800-square-foot lot in the RS-5 (Single Family Residential) zoning district. The existing lot coverage of the property is 31 percent.

The existing house has a kitchen, a living room, three bedrooms, and one bathroom. The existing house has a non-conforming side setbacks of 4 foot 1 inches on the east side.

The surrounding neighborhood contains mostly single-family houses. The surrounding houses are a mixture of one-story and two-story houses. On the block of the project site, houses range in size from 2,000 square feet to 4,000 square feet.

Vicinity Map

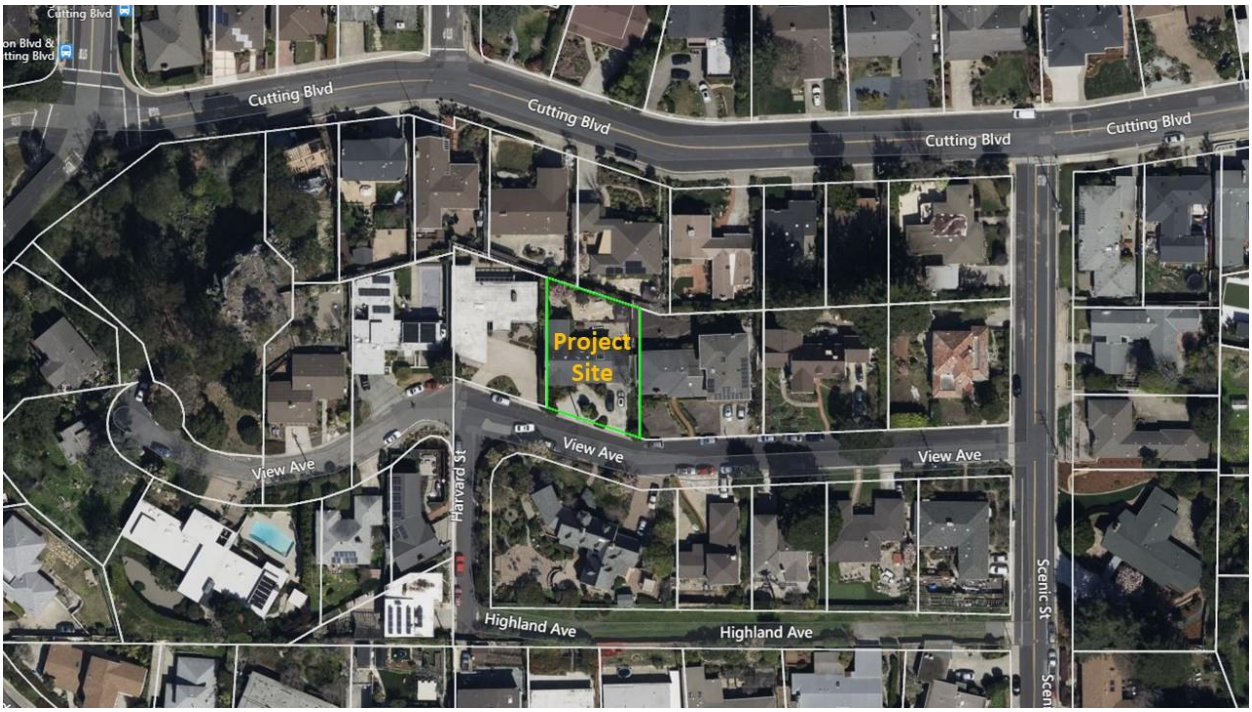

Site Photo

View of house from View Ave

Adjacent Designations and Land Uses

North: Single Family Residential (RS-5) Zoning and Low Density Residential General Plan designation. Single family house.

South: Single Family Residential (RS-5) Zoning and Low Density Residential General Plan designation. Single family house.

West: Single Family Residential (RS-5) Zoning and Low Density Residential General Plan designation. Single family house.

East: Single Family Residential (RS-5) Zoning and Low Density Residential General Plan designation. Single family house.

Analysis

Project Description

The applicant is proposing an addition which would add an additional bedroom, a full bathroom, and a half bathroom. The addition would extend the rear of the building by approximately 23 feet. The east side of the proposed addition would extend the east side building wall along the nonconforming setback. The proposed addition would not encroach further into the required side setback than the existing building. The resulting building would have four bedrooms, two and a half bathrooms, a living room, a dining room, and a kitchen.

Consistency with the Zoning District

Section 19.06.030 of the El Cerrito Municipal Code prescribes the development regulations for residential districts, including lot dimensions, building form and location, pedestrian orientation, vehicle accommodation and other standards. As noted in Table 1, the proposed addition is in compliance with the development standards except for the non-conforming side setback.

Table 1: Comparative Development Standards – RS-5 Zone and Proposed Project

Development Standard	Zoning Ord. Requirement	Existing	Proposed	Complies
Height (maximum)	25' maximum	14'-7"	No Change	Yes
Height (at setback lines)	15' maximum	14'-1"	9'	Yes
Setbacks				
Front	10' minimum	16'-10"	No Change	Yes
Side (east)	5' minimum	4'-1"	4'-1"	No. Use Permit required for extending this nonconforming setback
Side (west)	5' minimum	5'-4"	No Change	Yes.
Rear	15' minimum	39'-4"	18'-8"	Yes
Parking spaces (covered)	2 spaces minimum	2 spaces	No change	Yes
Lot Coverage	50% maximum	31.68%	33.37%	Yes

Nonconforming Setback

As described above, the existing house has a non-conforming side setback of 4 feet, 1 inch on the east side of the property. The proposed addition would extend the existing building by approximately 23 feet. The new addition would also be 4 feet, 1 inch from the east side property line and would not extend further into the required side setback than the existing building. Pursuant to ECMC Section 19.27.050, a Conditional Use Permit is required for additions and structural alterations that enlarge and extend a nonconforming structure when such enlargement does not comply with all applicable requirements.

Public Notice and Comment

The required public notice for the project was published in the East Bay Times and mailed to owners of property within 300 feet of the project site on or before December 6, 2023. No public comments were received prior to the publication of this report.

Environmental Review

This project is categorically exempt from the provisions of CEQA pursuant to Section 15301 of the CEQA Guidelines, Class 1: Existing Facilities.

Compliance with the General Plan

The Conditional Use Permit to allow an exception to the side setback and covered parking requirements is consistent with the following policies of the El Cerrito General Plan:

> **LU1.5: Suitable Housing.** Promote suitably located housing and services for all age groups within the City.
>
> *The proposed project would add an additional bedroom and bathroom to an existing single-family home, providing suitable housing for a large family or multi-generational household.*
>
> **CD1.1: Neighborhood Character.** Preserve and enhance the character of existing residential neighborhoods by limiting encroachment of new buildings and activities that are out of scale and character with the surrounding uses.
>
> *The project would extend one existing nonconforming side setback, but the addition would not project further into the required 5-foot setback than the existing structure. The resulting building would only be 2,183 sq. ft. which still matches the charter of the surrounding neighborhood. The project does not exceed the overall height limit for the RS-5 zoning district or the daylight plane requirements.*
>
> **CD4.1: Compatibility in Building Scale.** Avoid big differences in building scale and character between developments on adjoining lots.
>
> *The building at 7211 View Ave would comply with the height limit and lot coverage regulations of the RS-5 zone that control building scale and character. The addition's overall height and roof line would be consistent with many of the other single-family buildings on the 7000 block of View Ave. The addition's materials, colors, and design would match those of the existing house.*

Required Findings

In order to approve the Conditional Use Permits to allow expanding an existing nonconforming setback, the Planning Commission must make the following findings, contained in Section 19.34.040 of the El Cerrito Municipal Code:

1. The location, size, design, and operating characteristics of the proposed development will be harmonious and compatible with and will not adversely affect the livability or appropriate development of abutting properties and the surrounding neighborhood.

   The surrounding neighborhood predominantly contains single-family houses. The surrounding houses are predominantly single-family houses with a mixture of two-story and one-story houses. The proposed addition would increase the floor area of the house by 400 square feet and would result in a 2,183 square foot house on a 7,800 square foot lot. The location, size, and design of the

proposed house addition are consistent with the scale and design of development in the surrounding neighborhood.

2. The location and design of the proposal will provide a convenient and functional living, working, shopping, or civic environment that will be an attractive amenity for the City.

   The proposed project would add an additional bedroom, a full bathroom, and a half bathroom to an existing single-family home and would result in four bedrooms, a kitchen, two and half bathrooms, a dining room, and a living room. The resulting house will be an attractive addition to the neighborhood.

3. The proposal is consistent with the purpose of the district where it is located and conforms in all significant respects with the El Cerrito General Plan and with any other applicable plan adopted by the City Council.

   The Conditional Use Permit will allow the expansion of a single-family home, which is a permitted land use in the RS-5 district and consistent with the district's intent. The proposed project will implement the following policies of the El Cerrito General Plan: LU1.5: Suitable Housing, CD1.1: Neighborhood Character, and CD4.1: Compatibility in Building Scale.

Staff Recommendation

Based on the information contained in this report, staff recommends approval of Planning Application PL23-0153, as conditioned by the draft resolution in Attachment 1.

Proposed Motion

1. Move adoption of Planning Commission Resolution PC2023-05 approving the Conditional Use Permits to allow an addition expanding a nonconforming side setback to an existing single-family house at 7211 View Ave.

Appeal Period

Within ten (10) calendar days after the date of the decision, the Planning Commission action may be appealed to the City Council.

Attachments

1. Draft resolution
2. Project plans

Planning Commission Resolution PC 2023-05

APPLICATION NO. PL23-0153

A RESOLUTION OF THE CITY OF EL CERRITO PLANNING COMMISSION APPROVING A CONDITIONAL USE PERMIT TO ALLOW AN ADDITION THAT EXTENDS A NONCONFORMING SIDE SETBACK FOR AN EXISTING SINGLE-FAMILY HOUSE AT 7211 VIEW AVE

WHEREAS, the site is located at 7211 View Ave; and

WHEREAS, the existing Assessor's Parcel Number of the site is 505-021-010; and

WHEREAS, the General Plan land use classification of the site is Low Density Residential; and

WHEREAS, the zoning district of the site is RS-5 (Single Family Residential); and

WHEREAS, the project is categorically exempt from the provisions of the California Environmental Quality Act (CEQA) pursuant to Section 15301 of the CEQA Guidelines, Class 1: Existing Facilities; and

WHEREAS, on October 12, 2023, Ran Haimoff (the "applicant") submitted an application for a Conditional Use Permit for an addition extending a nonconforming side setback of an existing single-family house at 7211 View Ave; and

WHEREAS, on December 20, 2023, the Planning Commission, after due consideration of all evidence and reports and application materials offered for review does find and determine the following:

1. The surrounding neighborhood predominantly contains single-family houses. The surrounding houses are predominantly single-family houses with a mixture of two-story and one-story houses. The proposed addition would increase the floor area of the house by 400 square feet and would result in a 2,183 square foot house on a 7,800 square foot lot. The location, size, and design of the proposed house addition are consistent with the scale and design of development in the surrounding neighborhood.

2. The proposed project would add an additional bedroom, a full bathroom, and a half bathroom to an existing single-family home and would result in four bedrooms, a kitchen, two and half bathrooms, a dining room, and a living room. The resulting house will be an attractive addition to the neighborhood.

3. The Conditional Use Permit will allow the expansion of a single-family home, which is a permitted land use in the RS-5 district and consistent with the district's intent. The proposed project will implement the following policies of the El Cerrito General Plan: LU1.5: Suitable Housing, CD1.1: Neighborhood Character, and CD4.1: Compatibility in Building Scale.

NOW, THEREFORE, BE IT RESOLVED, that after careful consideration of maps, facts, exhibits, correspondence, and testimony, and other evidence submitted in this matter, and, in consideration of the findings, the El Cerrito Planning Commission hereby approves Application No. PL23-0055, subject to the following conditions:

Planning Division:

1. The project will be constructed substantially in conformance with the plans received by the City on October 12, 2023. Minor changes may be approved by the Zoning Administrator. All improvements

shall be installed in accordance with these approvals. Once constructed or installed, all improvements shall be maintained as approved.

2. If the applicant constructs buildings or makes improvements in accordance with these approvals, but fails to comply with any of the Conditions of Approval or limitations set forth in these Conditions of Approval and does not cure any such failure within a reasonable time after notice from the City of El Cerrito, then such failure shall be cause for non-issuance of a certificate of occupancy, revocation or modification of these approvals or any other remedies available to the City.

3. These Conditions of Approval shall apply to any successor in interest in the property and Applicant shall be responsible for assuring that the successor in interest is informed of the terms and conditions of this approval.

4. If not exercised, this Conditional Use Permit approval will expire two years after the date of this approval pursuant to El Cerrito Municipal Code Section 19.32.100.

CERTIFICATION

I certify that this resolution was adopted by the El Cerrito Planning Commission at a regular meeting held on December 20, 2023, upon motion of Commissioner _____, second by Commissioner _____:

AYES:
NOES:
ABSTAIN:
ABSENT:

_____
Sean Moss, AICP
Planning Manager

General Notes

1. All work and materials to conform to the requirements of local and state codes and the specifications of the National Board of Fire Underwriters. All work shall be done in accordance with the requirements of the city and/or appropriate authority having jurisdiction over construction where the project is located.
2. **Contractor shall check and verify all plan dimensions and conditions before proceeding with construction and shall report any disrepancies to the Architect for correction before beginning any work.**
3. Do not scale drawings. All written dimensions govern.
4. The Architect is not responsible for any deviations from the plans and specification information.
5. The Architect shall not have control or charge of and shall not be responsible for construction means, methods, techniques, sequences, or procedures, for safety precautions and programs in connection with the work, or the acts or omissions of the Contractor, subcontractors, or any other persons performing any work, or for failure of any of them to carry out the work in accordance with the construction documents.
6. The following set of drawings is an instrument of professional service and shall remain the property of Drafting Cafe, whether the project is executed or not. No changes, alterations, or deletions may be made hereto except by the Architect.

Symbol Legend

	Building Section Reference (drawing #/ sheet #)		Grid Line
	Wall Section Reference (drawing #/ sheet #)		Detail Reference (drawing #/ sheet #)
	Interior Elevation Reference (drawing #/ sheet #)	0"	Datum or Elevation Point
	Elevation Reference (drawing #/ sheet #)		Door Symbol
		1	Window Symbol
Room Name 100	Room Number	#	Key Note

Abbreviations

AD	Area Drain	MECH	Mechanical
ADJ	Adjustable	MIN	Minimum
AFF	Above Finish Floor	MTL	Metal
AGGR	Aggregate		
ARCH	Architectural	(N)	New
ASPH	Asphalt	NIC	Not In Contract
		NTS	Not To Scale
BLDG	Building		
BLK	Block	OBS	Obscure
BLKG	Blocking	OC	On Center
BO	Bottom Of	OD	Outside Diameter
BW	Bottom of Wall	OPN'G	Opening
CPT	Carpet	PLAM	Plastic Laminated
CAB	Cabinet	PL	Property Line
CJ	Construction Joint	PLT	Steel Plate
CL	Center Line	PLYWD	Plywood
CIOS	Closet	PT	Point
CLG	Ceiling		
CLR	Clear	QTY	Quantity
CO	Clean Out	R	Riser
COL	Column	RAD	Radius
CONC	Concrete	RET	Retaining
CONT	Continuous	R/A	Return Air
CSMT	Casement	RD	Round
CT	Ceramic Tile	RD	Roof Drain
CS	Counter Sink	REF	Refrigerator
		REG	Register
DEMO	Demolition	REINF	Rinforced
DET	Detail	REQ'D	Required
DH	Double Hung	RO	Rough Opening
DF	Douglas Fir	RWD	Redwood
DIAG	Diagonal	RWL	Rain Water Leader
DIM	Dimension		
DWGS	Drawings	SAG	Supply Air Grill
DN	Down	SV	Sheet Vinyl
DS	Downspout	SH	Single Hung
		SHT	Sheet
(E)	Existing	SIM	Similar
EJ	Expansion Joint	SM	Sheet Metal
EL	Elevation	SQ	Square
EQ	Equal	SSD	See Structural Drawings
EXT	Exterior	SS	Stainless Steel
		STD	Standard
FD	Floor Drain	STL	Steel
FF	Finish Floor	STRUC	Structural
FIN	Finish		
FOC	Face Of Concrete	T	Tread
FOS	Face Of Stud	TC	Top Of Curb
FOW	Face Of Wall	TEMP	Tempered Glass
FTG	Footing	TJI	Truss Joist
		TO	Top Of
GA	Gauge	TOC	Top Of Concrete
GALV	Galvanized	TYP	Typical
GWB	Gypsum Wall Board	TW	Top Of Wall
GL	Glass	TS	Tube Steel
GLU LAM	Glue Laminated		
GSM	Galv. Sheet Metal	UON	Unless Otherwise Noted
HB	Hose Bibb	VERT	Vertical
HGT	Height	VIF	Verify In Field
HM	Hollow Metal	VTO	Vent To Outside
HOR	Horizontal		
HP	High Point	W/	With
		W/C	Water Closet
ID	Inside Diameter	WD	Wood
INSUL	Insulation	W/H	Water Heater
INT	Interior	WP	Waterproof
		WPT	Work Point
JBOX	Junction Box		
JT	Joint	YD	Yard
LAM	Laminated		
LAV	Lavatory		
LP	Low Point		

Code Notes

Residential Building Code (CRC)

1. Flame spread index and smoke-developed index for insulation.
Insulation materials shall have a flame spread index not to exceed 25 and smoke-developed index not to exceed 450 where tested in accordance with ASTM E84 or UF 723.

2. Interior finish materials.
Wall and ceiling finishes shall have a flame spread index of not greater than 200 and a smoke-developed inde of not greater than 450.

3. Interior finish materials.
Interior finish materials shall be installed in a way that prevents them from becoming detached when subjectec to room temperatures of 200°F for at least 30 minutes.

4. Outside opening protection.
Air exhaust and intake openings shall be protected with corrosion-resistant screens, louvers or grilles having an opening size of not less than 1/4 inch and a maximum opening size of 1/2 inch, in any dimension.

5. Bathtub and shower spaces.
Showers and tub/shower combinations shall be finished with a nonabsorbent surface to at least 6 feet above the floor.

6. Glazing and Wet Surfaces.
Tempered glazing shall be provided in walls or enclosures containing bathtubs or showers, or facing tubs where the bottom exposed edge of the glazing is less than 60 inches measured vertically above any standing or walking surface. Exception: Glazing that is more than 60 inches measured horizontally and in a straight line from the water's edge of a bathtub, hot tub, spa or whirlpool.

7. Alarm listings.
Smoke alarms shall be listed in accordance with UL 217. Carbon monoxide alarms shall be listed in accordance with UL 2034. Combination smoke and carbon monoxide alarms shall be listed in accordance witl both UL 217 and UL 2034.

8. Alarm interconnection and power.
Smoke and carbon monoxide alarms are required to be interconnected such that activation of one alarm will activate all of the alarms and shall receive their primary power from the building wiring. Interconnection is not required where repairs or alterations to existing buildings do not result in the removal of wall and ceiling finishes and there is no access by means of attic, basement or crawl space.

Electrical Code(CEC)

1. Dedicated laundry circuit.
At least one 20-amp circuit shall be provided for laundry appliances. Laundry lighting shall not be on an outlet circuit.

2. Bathroom receptacles.
Receptacles in bathrooms must be supplied by at least one 20-amp circuit that shall have no other outlet. Bathroom lighting shall not be on an outlet circuit.

3. AFCI protection.
All branch circuits supplying outlets installed in bedrooms are required to be protected by a listed arc-fault circuit interrupter.

4. New Receptacles.
All added/replaced receptacles shall be listed tamper-resistant and shall have a listed combination-type arc-fault circuit interrupter (AFCI) either at the sub-panel or the first receptacle outlet of the existing branch circuit.

5. Receptacle Outlets.
Receptacles must be installed every 6 feet along wall sections unbroken by doorways, openings, fireplaces and fixed cabinets.

6. Bathroom receptacle.
At least one receptacle shall be provided within 3 feet of the outside edge of each sink and not more than 12 inches below the countertop. Receptacles installed within 6 feet of the outside edge of a sink, bathtub or shower shall be GFCI protected.

7. Light fixtures in damp locations.
Light fixtures located within tub or shower enclosures are to be labeled suitable for damp locations.

Plumbing Code(CPC)

1. Mixing valves.
Provide showers and tub-shower combinations with individual control valves that are pressure balancing, thermostatic or combination mixing vale type that prevent scald and thermal shock protection. Installer shall adjust such valves per manufacturer's instructions to deliver a maximum mixed water setting of 120°F.

2. Shower dam or threshold.
Shower dams and thresholds shall be between 2 inches and 9 inches in depth where measured from the top c the dam or threshold to the top of the drain. The shower floor shall slope no more than 1/4 inch per foot, and not less than 1/8 inch per foot. Control valves and shower heads shall be located on the sidewall of shower compartments or be otherwise arranged so that the showerhead does not discharge directly at the entrance tc the compartment. Shower doors shall open outward with a minimum 22 inches unobstructed opening for egress. Shower pan dimensions must be a minimum area of 1024 square inches and a minimum finish dimension of 30 inches in any direction.

3. Water Hammer.
Devices such as dishwashers and washing machines that have quick-acting valves require a water hammer arrester installed as close as possible to the device.

Mechanical Code (CMC)

1. Environmental air vents.
Termination of all environmental air ducts (e.g., bath fan, dryer vent, range hood, etc.) shall be at least 3 feet from a property line and from openings into the building, and 10 feet from a forced air inlet.

2. Laundry Makeup Air.
A minimum opening of 100 square inches for makeup air shall be provided in the laundry closet door or by other approved means. Moisture exhaust duct shall terminate to the outside and shall be equipped with a back draft damper. Exhaust duct length is limited to a combined horizontal and vertical length of 14 feet with 2 elbows. Two feet shall be deducted for each 90 degree elbow in excess of two.

Energy Code(CEnC)

1. Insulation.
Exterior wall, floor and roof framing spaces opened up during the course of remodel shall be insulated. R-13 (2x4 wall), R-19 (2x6 wall), R-19 (floor), and R-22 (attic/roof) insulation.

2. Bathroom exhaust fans.
Exhaust fans shall be switched separately from lighting system and controlled by a humidistat which shall be readily accessible. Fans shall be Energy Star compliant and ducted to terminate outside the building.

3. Outdoor lighting.
Outdoor lighting attached to the building must be high efficacy and controlled by both a manual switch and motion sensor or photocontrol devices (lighting not attached to building is exempt).

4. Lighting.
All added or replacement lighting shall be high efficacy in accordance with CA Energy Code, Table 150.0-A.

5. Vacancy sensor.
In bathrooms and laundry rooms, at least one luminaire in each of these spaces shall be controlled by a vacancy sensor.

CalGreen(CGBSC)

1. Water closets.
The effective flush volume of all water closets shall not exceed 1.28 gallons per flush. Tank-type water closets shall be certified to the performance criteria of the US EPA WaterSense Specification for Tank-type Toilets.

2. Single showerhead.
Showers with a single showerhead shall have a maximum flow rate of not more than 1.8 gallons per minute at 80 psi. Showerheads shall be certified to the performance criteria of the US EPA WaterSense Specification foı Showerheads.

3. Residential lavatory faucets.
The maximum flow rate of residential lavatory faucets shall not exceed 1.2 gallons per minute at 60 psi. The minimum flow rate of residential lavatory faucets shall not be less than 0.8 gallons per minute at 20 psi.

4. Kitchen faucets.
The maximum flow rate of kitchen faucets shall not exceed 1.8 gallons per minute at 60 psi. Kitchen faucets may temporarily increase the flow above the maximum rate, but not to exceed 2.2 gallons per minute at 60 psi and must default to a maximum flow rate of 1.8 gallons per minute at 60 psi.

5. Bathroom Ventilation.
Fans in bathrooms containing a tub or shower to be controlled by a humidistat and be energy star rated. Humidity controls shall be capable of adjustment between a relative humidity of 50% and 80%. If the bathroor fan provides continuous ventilation as required by the Energy Code it is exempt.

6. Grading and paving.
If the project disrupts the existing drainage path, the plans shall indicate how site grading or a drainage systen will manage all surface water flows to keep water from entering buildings.

Civil Code

1. Noncompliant plumbing fixtures
All noncompliant plumbing fixtures must be replaced to meet current water-conserving standards if property was built before Jan. 1, 1994. (California Civil Code sections 1101.1 through 1101.8).

Drawing List

Codes and Regulations

2022 California Building Code
2022 California Residential Code
2022 California Mechanical Code
2022 California Electrical Code
2022 California Plumbing Code
2022 California Green Building Code
2022 California Energy Code
2022 California Fire Code
Local codes, amendments and ordinances

Project Description

Addition to rear of garage for primary suite, by reconfiguring adjacent laundry room and bathroom into a powder room, and washer/dryer relocated to garage. Office to be reduced in size and closed off with french doors and glass sidelites. Bedroom to have ensuite bathroom with double vanity and shower, wc, and walk-in closet. Existing pergola to be demolished and new retaining walls added to accomodate addition.

Property Information

APN: 505-021-010

Address: 7211 View Ave.
El Cerrito, CA 94530

Project Team

Owner
Ran Haimoff
7211 View Ave,
El Cerrito, CA 94530
Tel:

Architect:
Drafting Cafe Architects
Ethan Andersen, AIA
484 Lake Park Ave #355
Oakland CA 94610
Tel: 510-251-2511

Structural Engineer:
Asley and Vance Engineering, Inc.
1610 Harrison St., Suite A
Oakland, CA 94612
Tel: 510-473-2221

T24:
TECC
Robert Mao, PE, CEA
6367 Swainland Road
Oakland, CA 94611
Tel: 510-387-2756

Development Information			
Zoning District	RS-5		
Fire Severity Zone	Very High		
Flood Zone	X		
Areas	**Existing**	**Proposed**	**Allowable**
Total Lot Area sf	7,800 sf	7,800 sf	
Floor Area (Main Res.)	1,783 sf	2,183 sf	- sf
Total Lot Coverage Area	2,471 sf	2,603 sf	3,900 sf
Lot Coverage (%)	31.68%	33.37%	50%
Floor Area Ratio	-	-	N/A
Development			
# of Dwelling Units	1	1	-
# of Parking Spaces	2	2	-

Dwelling is **NOT** equipped with an automatic fire sprinkler system.

California Building Code Notes

Occupancy Code: Type R-3/U
Construction Type: Type V B

Vicinity Map

Location Map

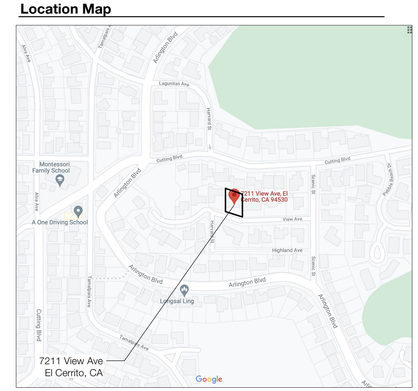

7211 View Ave.
El Cerrito, CA 94530

DRAFTING CAFE
ARCHITECTS
T: 510-251-2511
F: 510-735-9797
E: info@draftingcafe.com
www.draftingcafe.com

LICENSED ARCHITECT
ETHAN C ANDERSEN
C-34235
May 31, 2025
RENEWAL DATE
STATE OF CALIFORNIA

REVISIONS		
NO.	DESCRIPTION	DATE

Cover Sheet

DATE Sep 20, 2023
PROJECT 21113
SCALE NTS

A0.1

Keynotes

1. (E) 200A Electrical Meter
2. (E) Wood Fence
3. (E) Gas Meter
4. (E) Conc. Retaining Walls
5. (N) O'Hagin Attic Vent, Typ. of (5)
6. (N) Retaining Walls
7. (N) Eave Vent. Provide min. of (6)

Attic Vent Calculations:

Proposed (N) Attic

Attic Area: 431.5 s.f.
Vent factor: 1/150

(431.5 s.f. x 1/150)144in^2/1ft^2 = 415 s.i.

Req'd Net Free Ventilation Area (NFVA): 415 s.i.

O'Hagin Attic Vent: 72 s.i. NFVA x (5) = 360 s.i.
Eave Vent: 9.4 NFVA per segment, 6 segments = 56.4 s.i.

360 s.i. + 56.4 s.i. = 416.4 s.i. NFVA provided

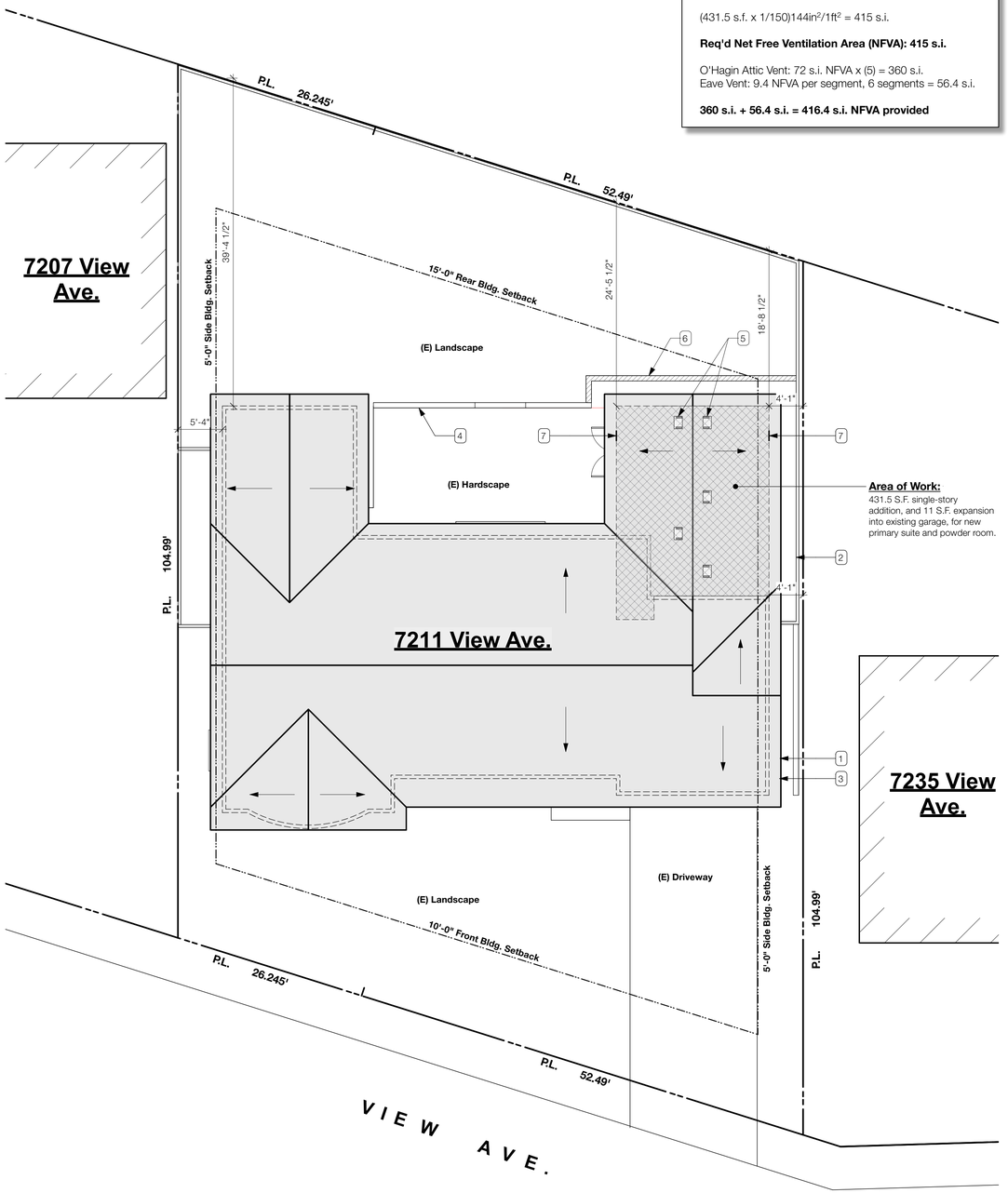

2 Site Map - Proposed
Scale: 1/8" = 1'-0"

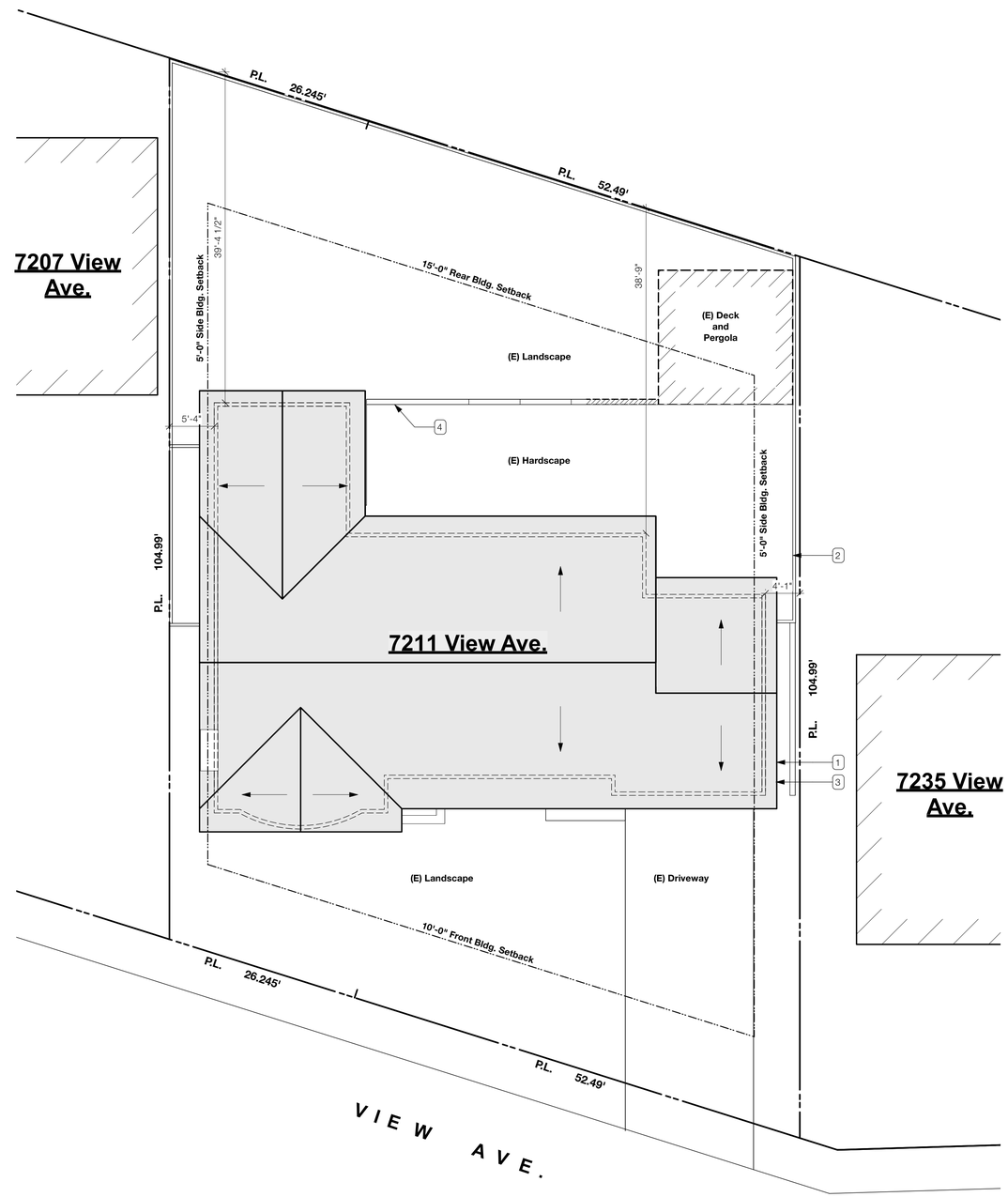

1 Site Map - Existing
Scale: 1/8" = 1'-0"

7211 View Ave.
El Cerrito, CA 94530

DRAFTING CAFE
ARCHITECTS
T: 510-251-2511
F: 510-735-9797
E: info@draftingcafe.com
www.draftingcafe.com

LICENSED ARCHITECT
ETHAN C ANDERSEN
C-34235
May 31, 2025
RENEWAL DATE
STATE OF CALIFORNIA

REVISIONS		
NO.	DESCRIPTION	DATE

Site Maps

DATE Sep 20, 2023
PROJECT 21113
SCALE 1/8" = 1'-0"

A0.2

EXISTING DOOR SCHEDULE

ID Label	Qty.	Width	Height	Type	Material	Finish	Notes
Existing							
1	2	2'0"	6'8"	Swing Simple			To Be Removed
2	2	2'4"	6'8"	Swing Simple			
3	5	2'6"	6'8"	Swing Simple			To Be Removed
4	3	2'6"	6'8"	Pocket Simple			
5	1	2'6"	6'10"	Swing Simple			To Be Removed
6	2	2'8"	6'8"	Swing Simple			
7	1	3'0"	6'8"	Swing Bi-part			
8	1	4'10"	6'8"	Slider			
9	1	5'0"	6'8"	Swing Bi-part			
10	2	5'2"	6'8"	Slider			
11	1	14'0"	6'8"	Overhead			

EXISTING WINDOW SCHEDULE

Id Label	Qty.	Operation	Width	Height	Manufacturer	Notes
Existing						
1	1	Horizontal Slider	2'0"	2'0"		To Be Removed
2	4	Fixed Glass	2'0"	6'4"		
3	2	Casement	2'0"	6'4"		
4	2	Fixed Glass	2'6"	3'10"		
5	2	Fixed Glass	2'8"	6'8"		
6	1	Horizontal Slider	3'4"	2'2"		
7	2	Horizontal Slider	4'0"	3'0"		
8	1	Horizontal Slider	4'0"	3'2"		To Be Removed
9	1	Horizontal Slider	6'0"	2'2"		To Be Removed
10	1	Horizontal Slider	6'0"	3'2"		
11	1	Fixed Glass	6'0"	3'4"		To Be Removed
12	1	Picture Window Slider	8'0"	3'2"		
13	1	Picture Window Slider	8'0"	4'4"		

Wall Legend

- (E) Wall
- Wall to be Demolished

Keynotes

1. (E) Deck and Pergola to be Demolished
2. Roof Line Above
3. Ceiling Transition Above
4. (E) Gas Meter
5. (E) 200A Electrical Meter
6. (E) Conc. Retaining Walls
7. Demo Section of (E) Retaining Wall

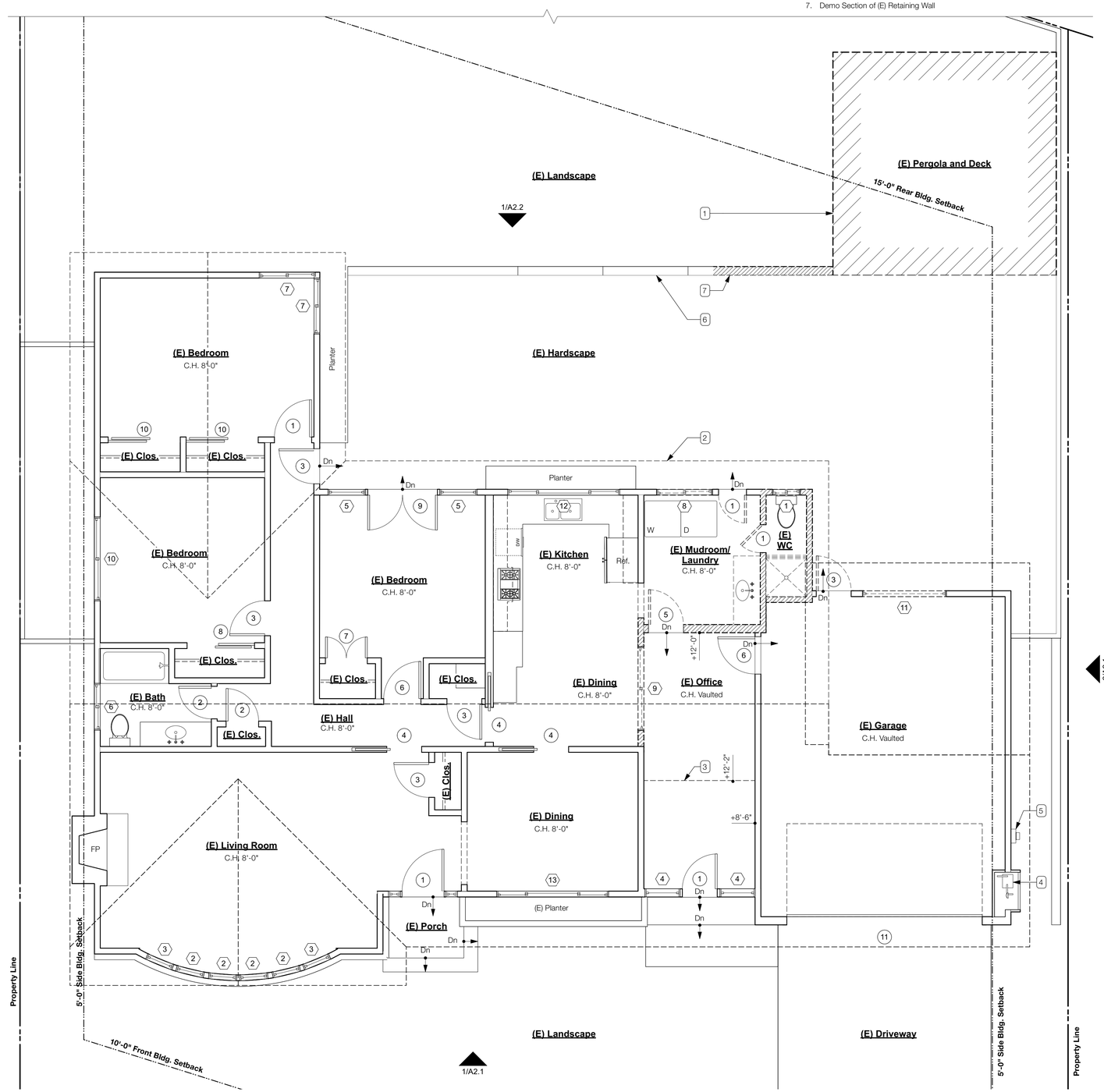

1 Floor Plan - Existing
Scale: 1/4" = 1'-0"

N

7211 View Ave.
El Cerrito, CA 94530

DRAFTING CAFE
ARCHITECTS
T: 510-251-2511
F: 510-735-9797
E: info@draftingcafe.com
www.draftingcafe.com

LICENSED ARCHITECT
ETHAN C ANDERSEN
C-34235
May 31, 2025
RENEWAL DATE
STATE OF CALIFORNIA

REVISIONS		
NO.	DESCRIPTION	DATE

Existing Floor Plans

DATE Sep 20, 2023

PROJECT 21113

SCALE 1/4" = 1'-0"

A1.1

PROPOSED DOOR SCHEDULE

ID Label	Qty.	Width	Height	Type	Material	Finish	Notes
Proposed							
1	1	2'6"	6'8"	Swing Simple			
2	2	2'6"	6'8"	Pocket Simple			
3	1	2'8"	6'8"	Swing Simple			
4	1	6'0"	6'8"	Swing Bi-part			
5	2	5'0"	6'8"	Swing Bi-part			Temp. Glass w/ 1'2" sidelites
7	1	2'4"	6'8"	Swing Simple			

PROPOSED WINDOW SCHEDULE

Id Label	Qty.	Operation	Width	Height	Manufacturer	Egress	Glazing	Notes
Proposed								
1	2	Awning	2'0"	2'6"		No		
2	1	Horizontal Slider	2'8"	3'0"		No		
3	1	Horizontal Slider	6'0"	4'0"		No		

Keynotes

1. Ceiling Transition Above
2. (E) Gas Meter
3. (E) 200A Electrical Meter
4. (E) Conc. Retaining Walls
5. (E) Washer & Dryer Shown Relocated to Garage
6. Section of (N) Retaining Wall Shown Hatched
7. (N) Crawlspace Area (hatched) = 431.5 SF
8. (N) Crawlspace Access Hatch. 18"x24" min.
9. (N) Attic Access Hatch. 22"x30" min.
10. Raised Floor, SSD

Wall Legend

- (E) Wall
- (N) Wall
- (N) 1-hr rated fire wall

Crawlspace Vent Calculations:

Crawlspace Area: 431.5 s.f.
Vent factor: 1/1500 (Class 1 Vapor Retarder Material provided over ground surface)

(431.5 s.f. x 1/1500)144in^2/1ft^2 = 41.4 s.i.

Required Net Free Ventilation Area (NFVA): 41.4 s.i.

16"x8" wall vents = 40 s.i. NFVA

(2) vents required; G.C. to provide min. (2) vents (80 s.i.), distributed to provide adequate cross ventilation throughout crawlspace (new & existing).

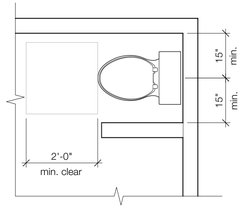

4 Toilet Clearance
Scale: 1/2" = 1'-0"

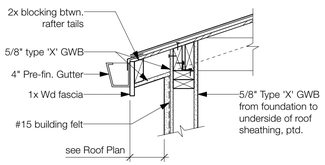

3 1-Hr. Fire Rated Eave
Scale: 1" = 1'-0"

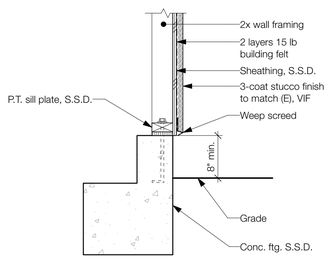

2 Typical Stucco Wall
Scale: 1" = 1'-0"

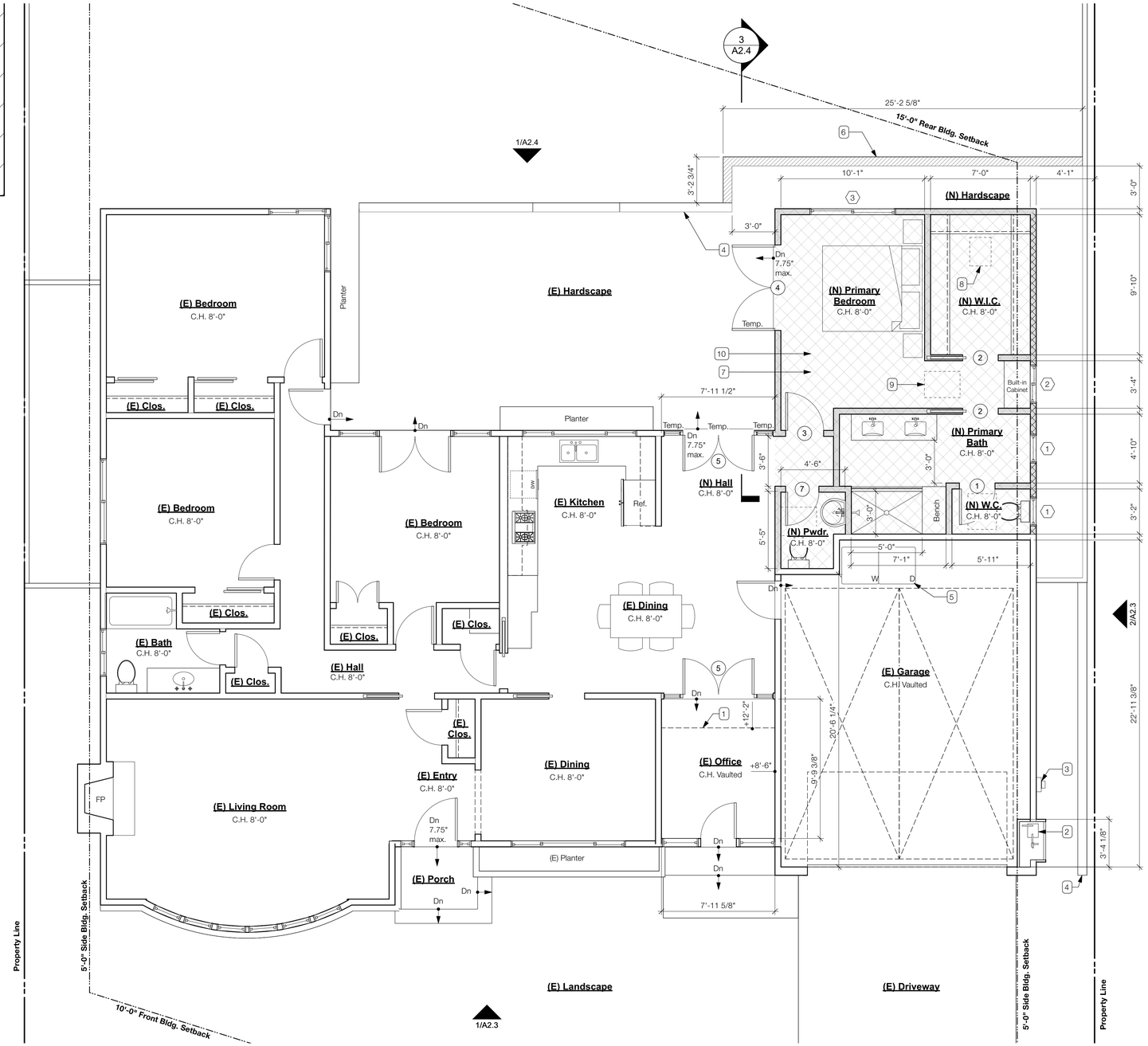

1 Floor Plan - Proposed
Scale: 1/4" = 1'-0"
Addition = 397 S.F.

7211 View Ave.
El Cerrito, CA 94530

DRAFTING CAFE
ARCHITECTS
T: 510-251-2511
F: 510-735-9797
E: info@draftingcafe.com
www.draftingcafe.com

LICENSED ARCHITECT
ETHAN C ANDERSEN
C-34235
May 31, 2025
RENEWAL DATE
STATE OF CALIFORNIA

REVISIONS		
NO.	DESCRIPTION	DATE

Proposed Floor Plans

DATE Sep 20, 2023
PROJECT 21113
SCALE as noted

A1.2

Electrical Symbols Legend

- Ceiling Fan & Light Combo
- Light - Ceiling Mounted
- Light - Exterior
- Light - Motion Sensor & Photo-controlled Outdoor Light
- Light - Pendant
- Light - Recessed Downlight
- Light - Shower Trim Recessed Downlight
- Light - Wall Mounted Sconce
- Receptacle - Dedicated 20-amp GFCI
- Receptacle - Duplex
- Receptacle - Special Purpose Outlet - 220V Dryer
- D Receptacle - Special Purpose Outlet - Washer
- Receptacle - Weatherproof
- Recptacle - Dedicated 20-amp GFCI at 44" A.F.F.
- Reversible Exhuast Fan
- Smoke and Carbon Monoxide Alarms
- Switch
- Switch - Dimmer
- $3D Switch - Three Way w/ Dimmer
- $3 Switch - Three-Way
- $V Switch - Vacancy Sensor

Lighting Schedule

Contractor to install fixtures and lamping matching these specifications, and complete CF-6R-LTG-01 Installation Certificate. All lighting to be UL listed; all high-efficacy fixtures to be Energy Star certified.

TYPE	DESCRIPTION	LAMPING	WATTAGE	EFFICACY	NOTES
F1	4 inch, non-adjustable recessed LED lamping in IC-rated housing.	LED 2700k	9.5W	High-Efficacy	CREE EcoSmart 'ECO4' in Halo 'H995ICAT' or similar.
F2	4 inch, adjustable recessed LED lamping in IC-rated housing.	LED 2700k	9.5W	High-Efficacy	
F3	4 inch, non-adjustable recessed LED lamping in IC-rated housing, UL listed for use in wet locations.	LED 2700k	9.5W	High-Efficacy	CREE EcoSmart 'ECO4' in Halo 'H995ICAT' or similar.
F4	Dimmable, hardwired, linkable undercabinet LED; lengths from 9 in. to 30 in.	LED 3000k	3.8W to 12W	High-Efficacy	Juno 'ULL-Series' or similar.
F5	Bathroom sconce on a dimmer	LED 3000k	Varies	High-Efficacy	
F6	Wall sconce on a dimmer.	LED 2700k	Varies	High-Efficacy	
F7	Exterior floodlight, controlled by a motion sensor and photo-control device	LED 2700k	Varies	High-Efficacy	
F8	Surface-mount ceiling fixture on a dimmer	LED A19 Base 2700k	Varies	High-Efficacy	
F9	Surface-mount ceiling fixture, manual on with a vacancy sensor	LED A19 Base 2700k	Varies	High-Efficacy	
F10	Decorative pendant.	LED A19 Base 2700k	Varies	High-Efficacy	
F11	Exterior sconce, manual on with vacancy sensor.	LED 3000k	Varies	High-Efficacy	

Keynotes

1. Ceiling Transition Above
2. Quad Outlet

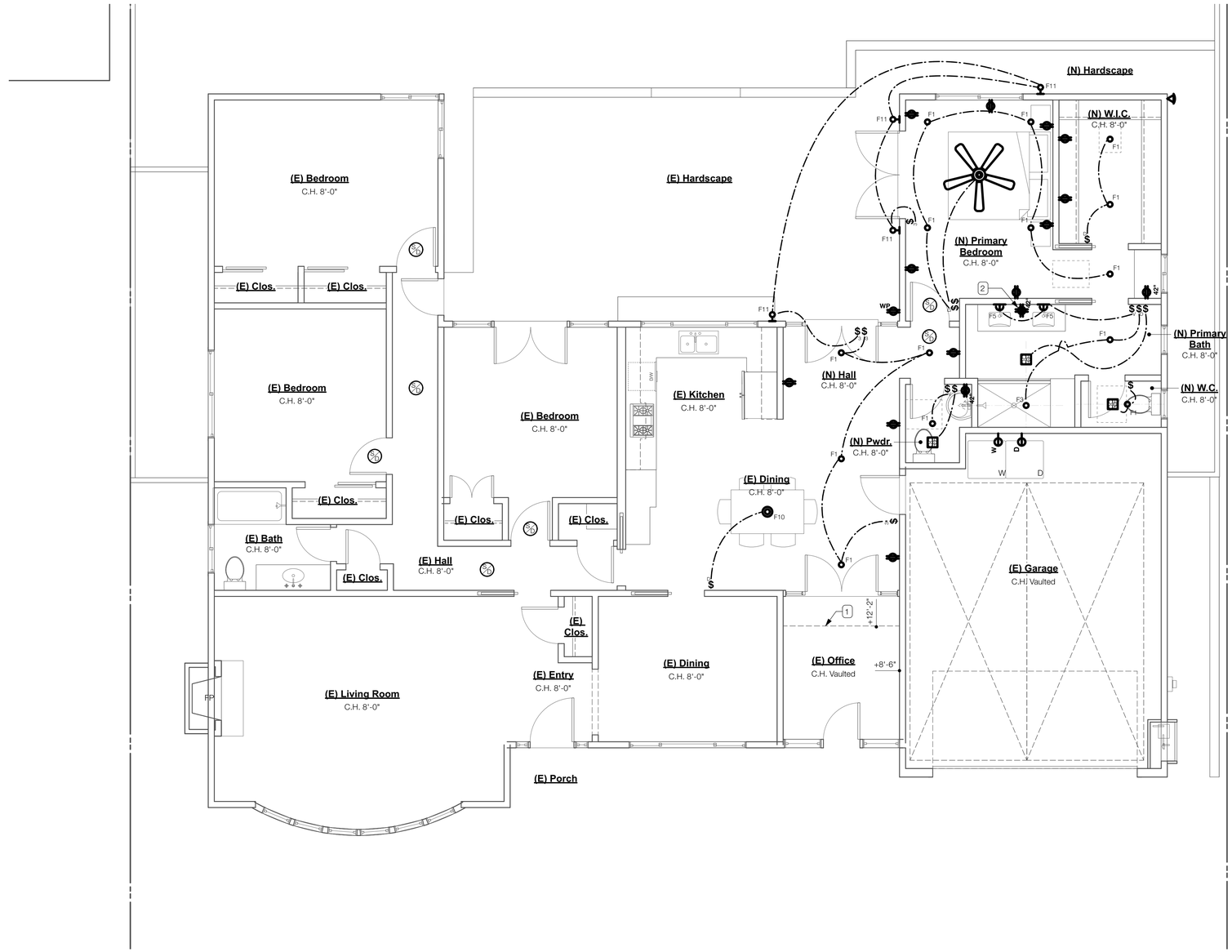

1 Lighting and Electrical Plan - Proposed
Scale: 1/4" = 1'-0"

N

7211 View Ave.
El Cerrito, CA 94530

DRAFTING CAFE
ARCHITECTS
T: 510-251-2511
F: 510-735-9797
E: info@draftingcafe.com
www.draftingcafe.com

LICENSED ARCHITECT
ETHAN C ANDERSEN
C-34235
May 31, 2025
RENEWAL DATE
STATE OF CALIFORNIA

REVISIONS		
NO.	DESCRIPTION	DATE

Proposed Electrical and Lighting Plan

DATE Sep 20, 2023

PROJECT 21113

SCALE 1/4" = 1'-0"

A1.3

1 Floor Area Diagram - Existing
Scale: 1/4" = 1'-0"

N

7211 View Ave.
El Cerrito, CA 94530

DRAFTING CAFE
ARCHITECTS
T: 510-251-2511
F: 510-735-9797
E: info@draftingcafe.com
www.draftingcafe.com

LICENSED ARCHITECT
ETHAN C ANDERSEN
C-34235
May 31, 2025
RENEWAL DATE
STATE OF CALIFORNIA

REVISIONS		
NO.	DESCRIPTION	DATE

Existing Floor Area Diagrams

DATE Sep 20, 2023

PROJECT 21113

SCALE 1/4" = 1'-0"

A1.4

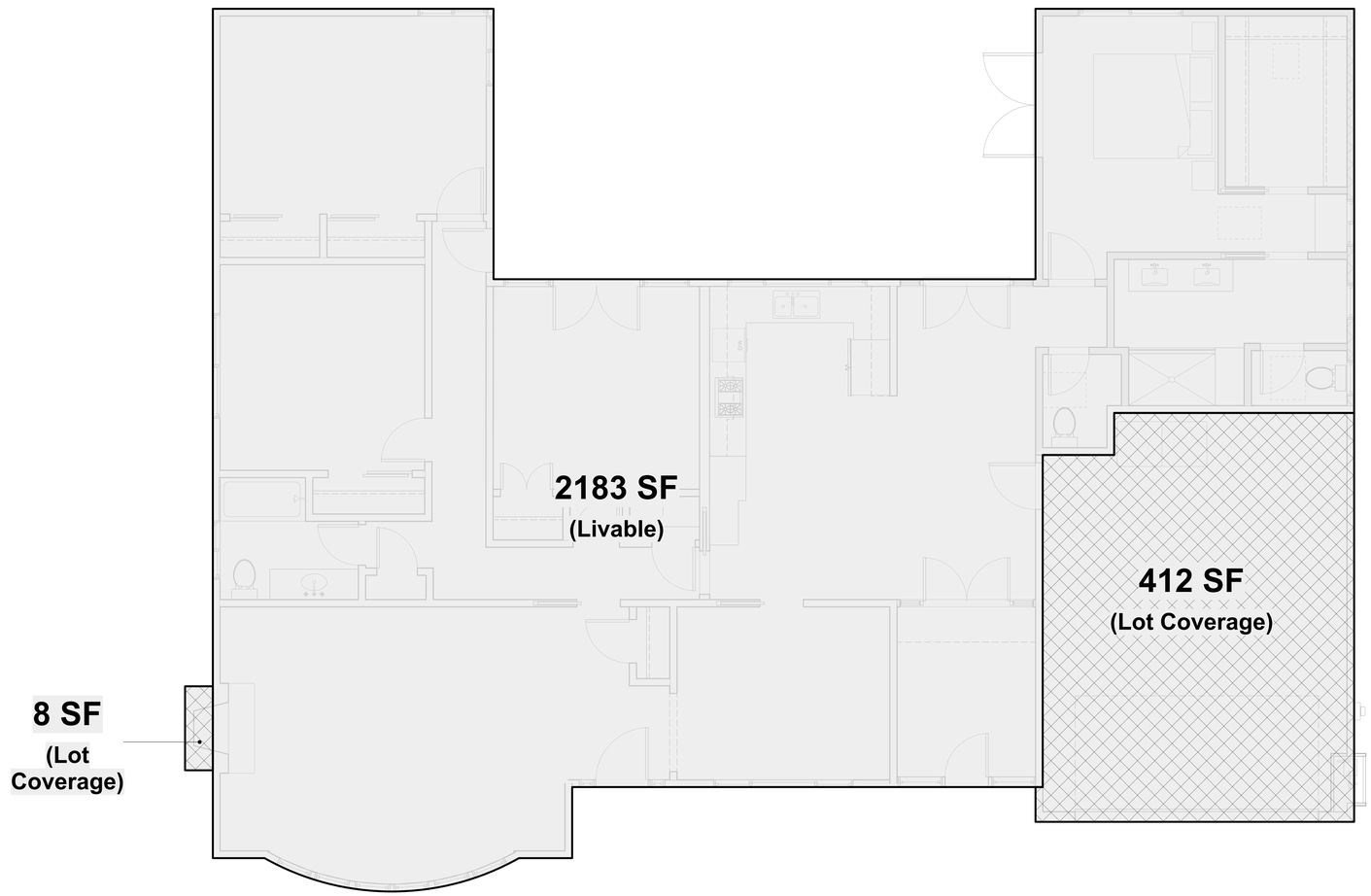

1 Floor Area Diagram - Proposed
Scale: 1/4" = 1'-0"

N

7211 View Ave.
El Cerrito, CA 94530

DRAFTING CAFE
ARCHITECTS
T: 510-251-2511
F: 510-735-9797
E: info@draftingcafe.com
www.draftingcafe.com

LICENSED ARCHITECT
ETHAN C ANDERSEN
C-34235
May 31, 2025
RENEWAL DATE
STATE OF CALIFORNIA

REVISIONS		
NO.	DESCRIPTION	DATE

Proposed Floor Area Diagrams

DATE Sep 20, 2023

PROJECT 21113

SCALE 1/4" = 1'-0"

A1.5

Keynotes

1. (E) Asphalt Comp. Roof Shingles
2. (E) Painted Ext. Cement Plaster Finish
3. (E) Wood Fence
4. (E) Brick Wainscot
5. (E) Vinyl Windows
6. (E) Wood Shingle Siding
7. (E) Gas and Electrical Meters in Utility Closet
8. (E) Conc. Retaining Walls

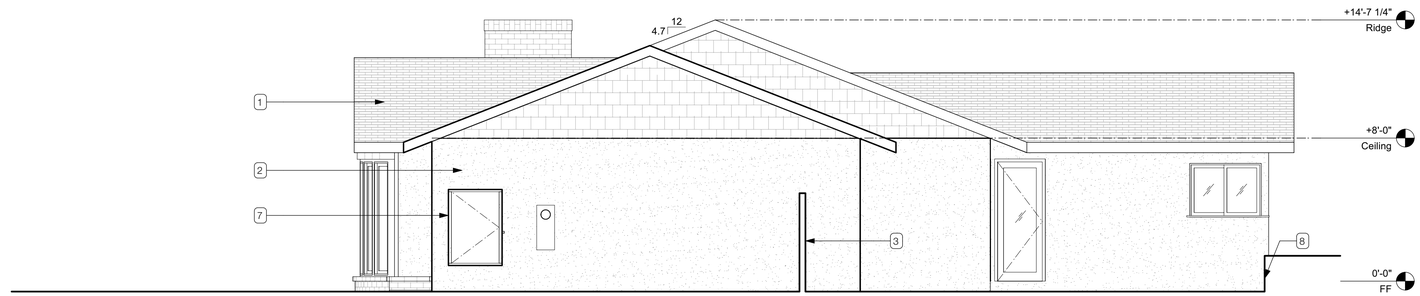

2 East (Side) Elevation - Existing
Scale: 1/4" = 1'-0"

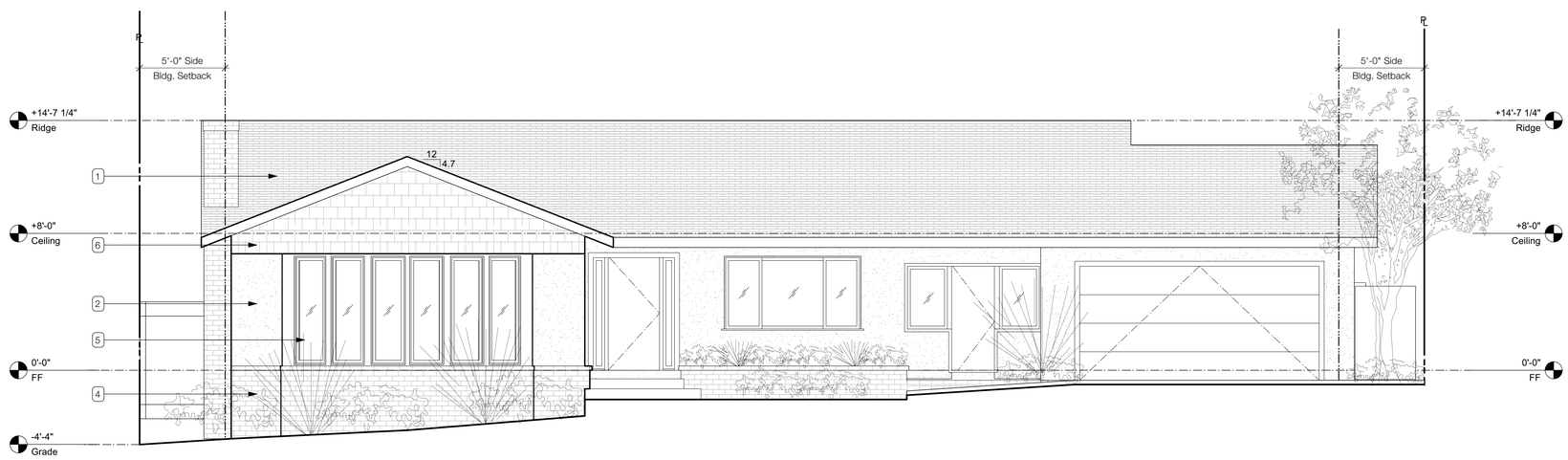

1 South (Front) Elevation - Existing
Scale: 1/4" = 1'-0"

7211 View Ave.
El Cerrito, CA 94530

DRAFTING CAFE
ARCHITECTS
T: 510-251-2511
F: 510-735-9797
E: info@draftingcafe.com
www.draftingcafe.com

LICENSED ARCHITECT
ETHAN C ANDERSEN
C-34235
May 31, 2025
RENEWAL DATE
STATE OF CALIFORNIA

REVISIONS		
NO.	DESCRIPTION	DATE

Existing Elevations

DATE Sep 20, 2023

PROJECT 21113

SCALE 1/4" = 1'-0"

A2.1

Keynotes

1. (E) Asphalt Comp. Roof Shingles
2. (E) Painted Ext. Cement Plaster Finish
3. (E) Wood Fence
4. (E) Brick Wainscot
5. (E) Vinyl Windows
6. (E) Wood Shingle Siding
7. Demo (E) Doors and Windows, Shown Dashed

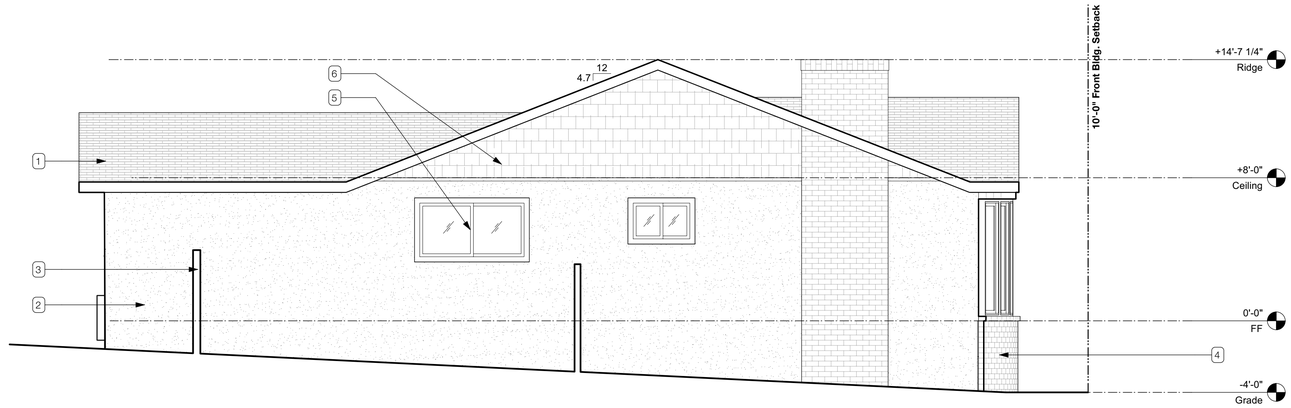

2 West (SIde) Elevation - Existing
Scale: 1/4" = 1'-0"

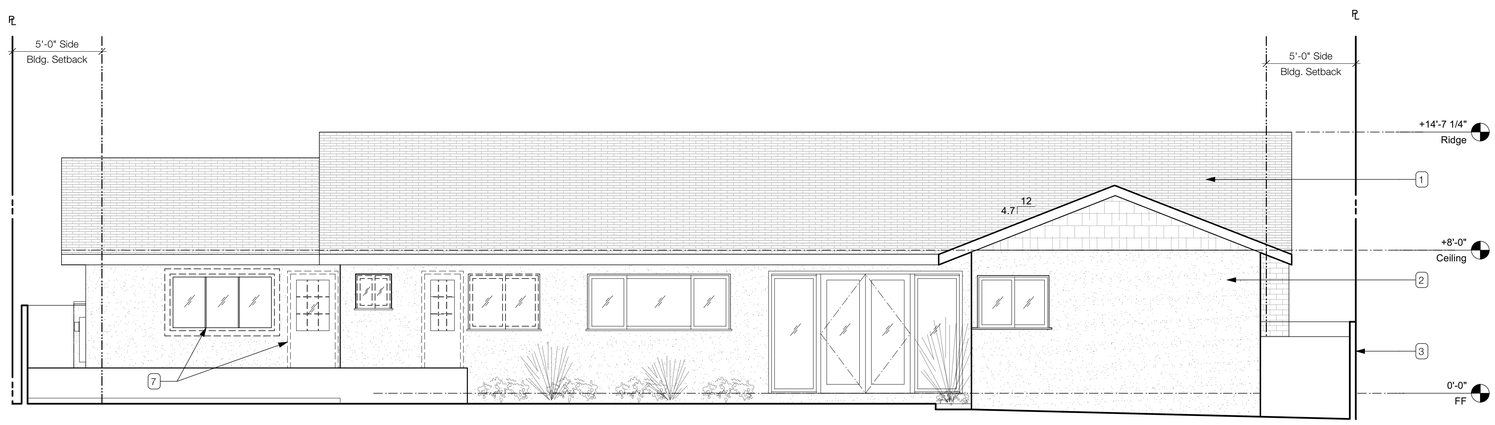

1 North (Rear) Elevation - Existing
Scale: 1/4" = 1'-0"

7211 View Ave.
El Cerrito, CA 94530

DRAFTING CAFE
ARCHITECTS
T: 510-251-2511
F: 510-735-9797
E: info@draftingcafe.com
www.draftingcafe.com

LICENSED ARCHITECT
ETHAN C ANDERSEN
C-34235
May 31, 2025
RENEWAL DATE
STATE OF CALIFORNIA

REVISIONS		
NO.	DESCRIPTION	DATE

Existing Elevations

DATE Sep 20, 2023

PROJECT 21113

SCALE 1/4" = 1'-0"

A2.2

Keynotes

1. (E) Asphalt Comp. Roof Shingles
2. (E) Painted Ext. Cement Plaster Finish
3. (E) Brick Wainscot
4. (E) Vinyl Windows
5. (N) Conc. Retaining Walls
6. (E) Gas and Electrical Meters in Utility Closet
7. (E) Wood Fence
8. (E) Wood Shingle Siding
9. (N) Vinyl Windows to Match (E)
10. (N) Asphalt Comp. Roof Shingles to Match (E)
11. (N) Painted Ext. Cement Plaster Finish to Match (E)
12. (N) 16"x8" Crawlspace Vent

Note: Contractor to verify existing roof slope.
All new roof slopes to match existing.

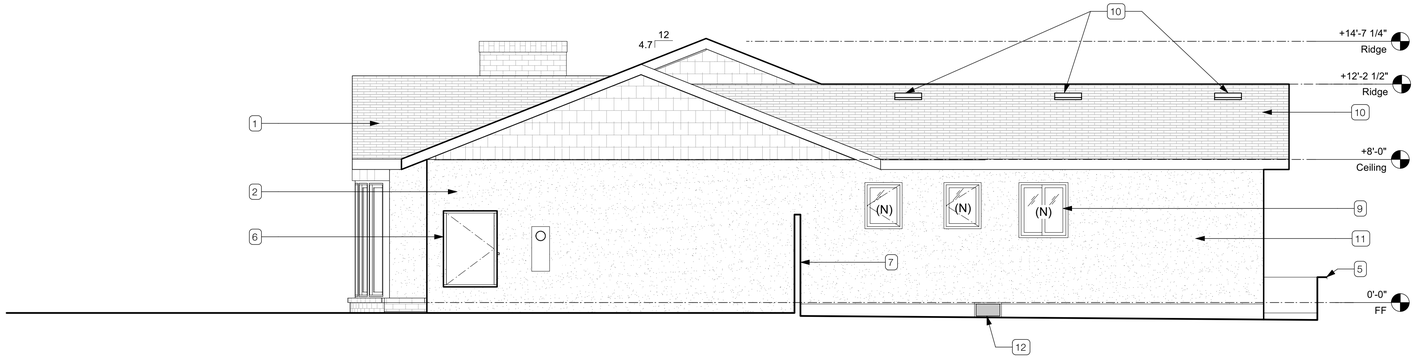

2 East (Side) Elevation - Proposed
Scale: 1/4" = 1'-0"

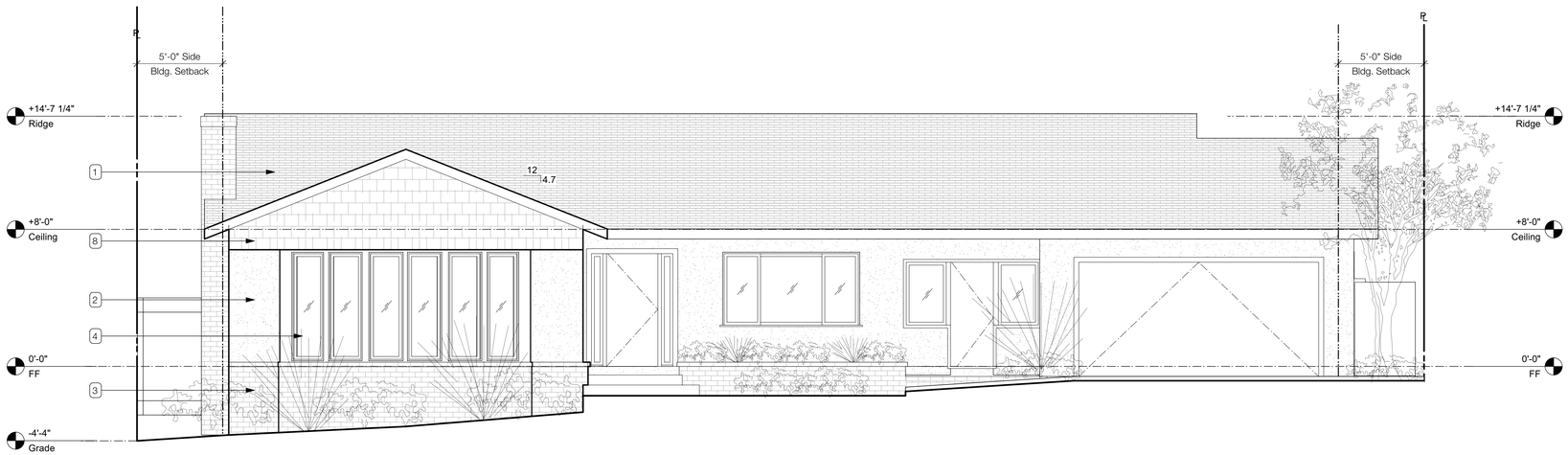

1 South (Front) Elevation - Proposed
Scale: 1/4" = 1'-0"

7211 View Ave.
El Cerrito, CA 94530

DRAFTING CAFE
ARCHITECTS

T: 510-251-2511
F: 510-735-9797
E: info@draftingcafe.com
www.draftingcafe.com

LICENSED ARCHITECT
ETHAN C ANDERSEN
C-34235
May 31, 2025
RENEWAL DATE
STATE OF CALIFORNIA

REVISIONS		
NO.	DESCRIPTION	DATE

Proposed Elevations

DATE Sep 20, 2023

PROJECT 21113

SCALE 1/4" = 1'-0"

A2.3

Keynotes

1. (E) Asphalt Comp. Roof Shingles
2. (E) Painted Ext. Cement Plaster Finish
3. (E) Wood Fence
4. (E) Brick Wainscot
5. (E) Vinyl Windows
6. (E) Wood Shingle Siding
7. (N) Vinyl Windows to Match (E)
8. (N) Asphalt Comp. Roof Shingles to Match (E)
9. (N) Painted Ext. Cement Plaster Finish to Match (E)
10. (N) O'Hagin Attic Vent
11. (N) 16"x8" Crawlspace Vent
12. (N) TJI Floor Joists with R-19 insul., SSD
13. N/A
14. (N) Prefabricated Roof Trusses with R-30 insul., SSD
15. (N) Wood Shingle Siding to Match (E)
16. (N) 2x4 Wall Studs with R-15 insul., SSD

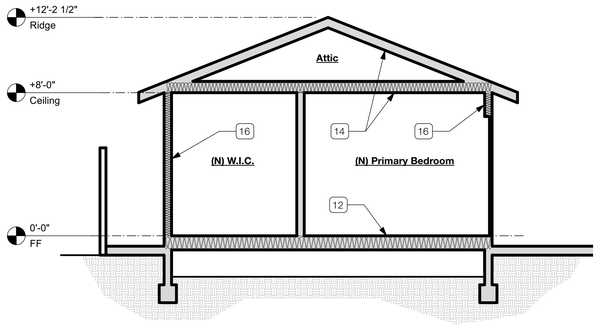

5 Building Cross Section - Addition
Scale: 1/4" = 1'-0"

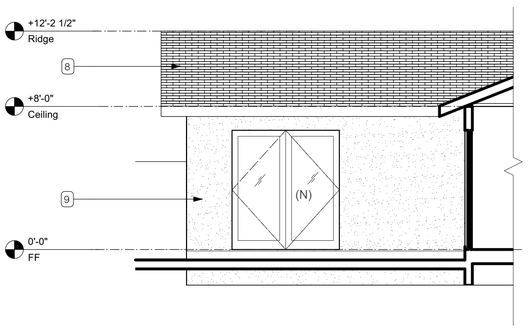

3 Partial West Elevation - Proposed
Scale: 1/4" = 1'-0"

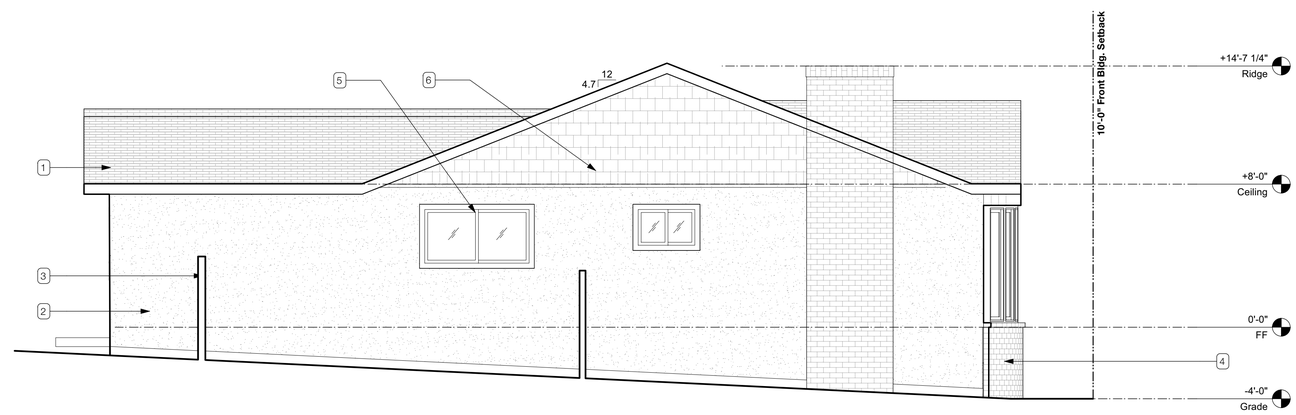

2 West (SIde) Elevation - Proposed
Scale: 1/4" = 1'-0"

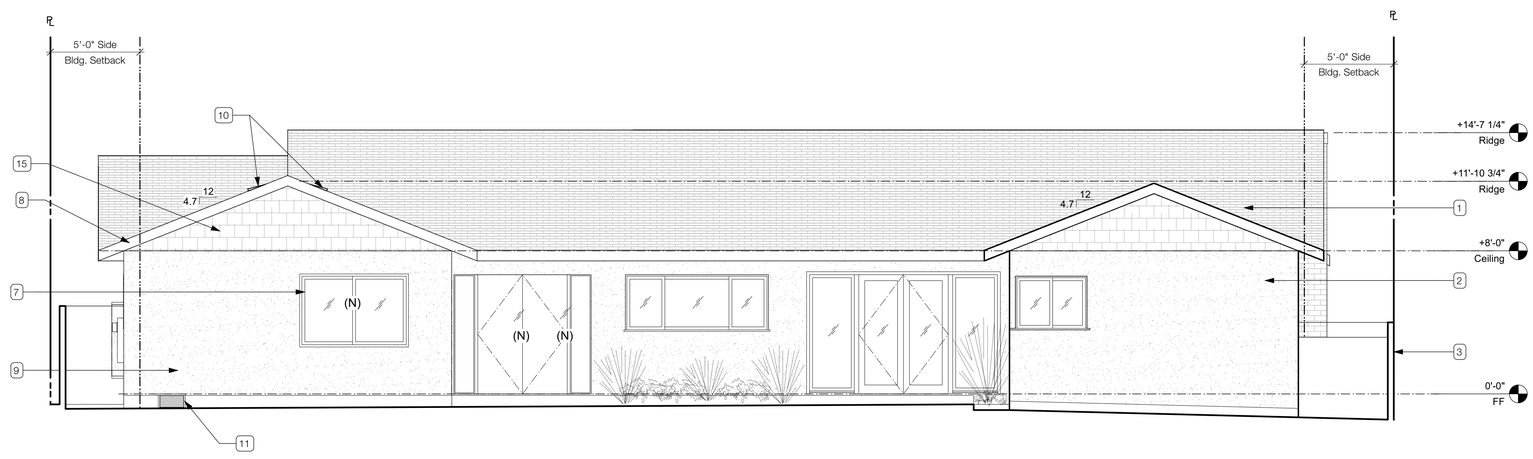

1 North (Rear) Elevation - Proposed
Scale: 1/4" = 1'-0"

7211 View Ave.
El Cerrito, CA 94530

DRAFTING CAFE
ARCHITECTS
T: 510-251-2511
F: 510-735-9797
E: info@draftingcafe.com
www.draftingcafe.com

LICENSED ARCHITECT
ETHAN C ANDERSEN
C-34235
May 31, 2025
RENEWAL DATE
STATE OF CALIFORNIA

REVISIONS		
NO.	DESCRIPTION	DATE

Proposed Elevations

DATE Sep 20, 2023

PROJECT 21113

SCALE 1/4" = 1'-0"

A2.4

CERTIFICATE OF COMPLIANCE - RESIDENTIAL PERFORMANCE COMPLIANCE METHOD **CF1R-PRF-01-E**

Project Name: Residential Addition & Remodel **Calculation Date/Time:** 2023-08-03T08:36:38-07:00 **(Page 1 of 10)**

Calculation Description: Title 24 Analysis **Input File Name:** dc 7211 view av.ribd22x

GENERAL INFORMATION					
01	Project Name	Residential Addition & Remodel			
02	Run Title	Title 24 Analysis			
03	Project Location	7211 View Avenue			
04	City	El Cerrito	05	Standards Version	2022
06	Zip code	94530	07	Software Version	EnergyPro 9.0
08	Climate Zone	3	09	Front Orientation (deg/ Cardinal)	135
10	Building Type	Single family	11	Number of Dwelling Units	1
12	Project Scope	Addition and/or Alteration	13	Number of Bedrooms	4
14	Addition Cond. Floor Area (ft^2)	400	15	Number of Stories	1
16	Existing Cond. Floor Area (ft^2)	1783	17	Fenestration Average U-factor	0.3
18	Total Cond. Floor Area (ft^2)	2183	19	Glazing Percentage (%)	19.70%
20	ADU Bedroom Count	n/a			

COMPLIANCE RESULTS	
01	Building Complies with Computer Performance
02	Building does not require field testing or HERS verification
03	This building incorporates one or more Special Features shown below

CERTIFICATE OF COMPLIANCE - RESIDENTIAL PERFORMANCE COMPLIANCE METHOD **CF1R-PRF-01-E**

Project Name: Residential Addition & Remodel **Calculation Date/Time:** 2023-08-03T08:36:38-07:00 **(Page 2 of 10)**

Calculation Description: Title 24 Analysis **Input File Name:** dc 7211 view av.ribd22x

ENERGY USE SUMMARY

Energy Use	Standard Design Source Energy (EDR1) (kBtu/ft^2 -yr)	Standard Design TDV Energy (EDR2) (kTDV/ft^2 -yr)	Proposed Design Source Energy (EDR1) (kBtu/ft^2 -yr)	Proposed Design TDV Energy (EDR2) (kTDV/ft^2 -yr)	Compliance Margin (EDR1)	Compliance Margin (EDR2)
Space Heating	0	69.55	0	64.32	0	5.23
Space Cooling	0	15.5	0	18.57	0	-3.07
IAQ Ventilation	0	0	0	0	0	0
Water Heating	0	31.09	0	31.09	0	0
Self Utilization/Flexibility Credit						
Efficiency Compliance Total	**0**	**116.14**	**0**	**113.98**	**0**	**2.16**
Photovoltaics		0		0		
Battery				0		
Flexibility						
Indoor Lighting	0	7.14	0	7.14		
Appl. & Cooking	0	17.83	0	17.84		
Plug Loads	0	31.02	0	31.02		
Outdoor Lighting	0	1.77	0	1.77		
TOTAL COMPLIANCE	**0**	**173.9**	**0**	**171.75**		

Registration Number: Registration Date/Time: HERS Provider:

CA Building Energy Efficiency Standards - 2022 Residential Compliance Report Version: 2022.0.000 Schema Version: rev 20220901 Report Generated: 2023-08-03 08:37:00

CERTIFICATE OF COMPLIANCE - RESIDENTIAL PERFORMANCE COMPLIANCE METHOD **CF1R-PRF-01-E**

Project Name: Residential Addition & Remodel **Calculation Date/Time:** 2023-08-03T08:36:38-07:00 **(Page 3 of 10)**

Calculation Description: Title 24 Analysis **Input File Name:** dc 7211 view av.ribd22x

ENERGY USE INTENSITY

	Standard Design (kBtu/ft^2 - yr)	Proposed Design (kBtu/ft^2 - yr)	Compliance Margin (kBtu/ft^2 - yr)	Margin Percentage
Gross EUI[1]	35.4	34.31	1.09	3.08
Net EUI[2]	35.4	34.31	1.09	3.08

Notes
1. Gross EUI is Energy Use Total (not including PV) / Total Building Area.
2. Net EUI is Energy Use Total (including PV) / Total Building Area.

REQUIRED SPECIAL FEATURES

The following are features that must be installed as condition for meeting the modeled energy performance for this computer analysis.

- New ductwork added is less than 40 ft. in length

HERS FEATURE SUMMARY

The following is a summary of the features that must be field-verified by a certified HERS Rater as a condition for meeting the modeled energy performance for this computer analysis. Additional detail is provided in the building tables below. Registered CF2Rs and CF3Rs are required to be completed in the HERS Registry

BUILDING - FEATURES INFORMATION

01	02	03	04	05	06	07
Project Name	Conditioned Floor Area (ft^2)	Number of Dwelling Units	Number of Bedrooms	Number of Zones	Number of Ventilation Cooling Systems	Number of Water Heating Systems
Residential Addition & Remodel	2183	1	4	2	0	1

ZONE INFORMATION

01	02	03	04	05	06	07
Zone Name	Zone Type	HVAC System Name	Zone Floor Area (ft^2)	Avg. Ceiling Height	Water Heating System 1	Status
Existing	Conditioned	(e) FAU1	1783	9	DHW Sys 1	Existing Unchanged
Addition	Conditioned	(e) FAU1	400	9	DHW Sys 1	New

Registration Number: Registration Date/Time: HERS Provider:

CA Building Energy Efficiency Standards - 2022 Residential Compliance Report Version: 2022.0.000 Schema Version: rev 20220901 Report Generated: 2023-08-03 08:37:00

CERTIFICATE OF COMPLIANCE - RESIDENTIAL PERFORMANCE COMPLIANCE METHOD **CF1R-PRF-01-E**

Project Name: Residential Addition & Remodel **Calculation Date/Time:** 2023-08-03T08:36:38-07:00 **(Page 4 of 10)**

Calculation Description: Title 24 Analysis **Input File Name:** dc 7211 view av.ribd22x

OPAQUE SURFACES

01	02	03	04	05	06	07	08	09	10	11
Name	Zone	Construction	Azimuth	Orientation	Gross Area (ft^2)	Window and Door Area (ft2)	Tilt (deg)	Wall Exceptions	Status	Verified Existing Condition
Front	Existing	R-0 Wall	135	Front	490	186	90	none	Existing	No
Left	Existing	R-0 Wall	225	Left	450	29	90	none	Existing	No
Rear	Existing	R-0 Wall	315	Back	490	158	90	none	Existing	No
Right	Existing	R-0 Wall	45	Right	290	12	90	none	Existing	No
Front 2	Addition	R-15 Wall	135	Front	140	0	90	Extension	New	n/a
Left 2	Addition	R-15 Wall	225	Left	110	40	90	Extension	New	n/a
Rear 2	Addition	R-15 Wall	315	Back	140	24	90	Extension	New	n/a
Right 2	Addition	R-15 Wall	45	Right	160	18	90	Extension	New	n/a
Roof	Existing	R-19 Roof Attic	n/a	n/a	1783	n/a	n/a		Existing	No
Roof 2	Addition	R-30 Roof Attic	n/a	n/a	400	n/a	n/a		New	n/a
Raised Floor	Existing	R-0 Floor Crawlspace	n/a	n/a	1783	n/a	n/a		Existing	No
Raised Floor 2	Addition	R-19 Floor Crawlspace	n/a	n/a	400	n/a	n/a		New	n/a

ATTIC

01	02	03	04	05	06	07	08	09	10
Name	Construction	Type	Roof Rise (x in 12)	Roof Reflectance	Roof Emittance	Radiant Barrier	Cool Roof	Status	Verified Existing Condition
Attic Existing	Attic RoofExisting	Ventilated	5	0.1	0.85	No	No	Existing	No
Attic Addition	Attic RoofAddition	Ventilated	5	0.1	0.85	No	No	New	n/a

CERTIFICATE OF COMPLIANCE - RESIDENTIAL PERFORMANCE COMPLIANCE METHOD **CF1R-PRF-01-E**

Project Name: Residential Addition & Remodel **Calculation Date/Time:** 2023-08-03T08:36:38-07:00 **(Page 5 of 10)**

Calculation Description: Title 24 Analysis **Input File Name:** dc 7211 view av.ribd22x

FENESTRATION / GLAZING

01	02	03	04	05	06	07	08	09	10	11	12	13	14	15	16
Name	Type	Surface	Orientation	Azimuth	Width (ft)	Height (ft)	Mult.	Area (ft^2)	U-factor	U-factor Source	SHGC	SHGC Source	Exterior Shading	Status	Verified Existing Condition
Window	Window	Front	Front	135			1	150	0.58	Table 110.6-A	0.65	Table 110.6-B	Bug Screen	Existing	No
Window 2	Window	Left	Left	225			1	29	0.58	Table 110.6-A	0.65	Table 110.6-B	Bug Screen	Existing	No
Window 3	Window	Rear	Back	315			1	132	0.58	Table 110.6-A	0.65	Table 110.6-B	Bug Screen	Existing	No
(n) Window	Window	Rear	Back	315			1	26	0.3	NFRC	0.8	NFRC	Bug Screen	New	NA
Window 4	Window	Right	Right	45			1	12	0.58	Table 110.6-A	0.65	Table 110.6-B	Bug Screen	Existing	No
(n) Window 2	Window	Left 2	Left	225			1	40	0.3	NFRC	0.8	NFRC	Bug Screen	New	NA
(n) Window 3	Window	Rear 2	Back	315			1	24	0.3	NFRC	0.8	NFRC	Bug Screen	New	NA
(n) Window 4	Window	Right 2	Right	45			1	18	0.3	NFRC	0.8	NFRC	Bug Screen	New	NA

OPAQUE DOORS

01	02	03	04	05	06
Name	Side of Building	Area (ft^2)	U-factor	Status	Verified Existing Condition
Entry Door	Front	20	0.5	Existing	No
Office Door	Front	16	0.5	Existing	No

Registration Number: Registration Date/Time: HERS Provider:

CA Building Energy Efficiency Standards - 2022 Residential Compliance Report Version: 2022.0.000 Report Generated: 2023-08-03 08:37:00

CERTIFICATE OF COMPLIANCE - RESIDENTIAL PERFORMANCE COMPLIANCE METHOD **CF1R-PRF-01-E**

Project Name: Residential Addition & Remodel **Calculation Date/Time:** 2023-08-03T08:36:38-07:00 **(Page 6 of 10)**

Calculation Description: Title 24 Analysis **Input File Name:** dc 7211 view av.ribd22x

OPAQUE SURFACE CONSTRUCTIONS

01	02	03	04	05	06	07	08
Construction Name	Surface Type	Construction Type	Framing	Total Cavity R-value	Interior / Exterior Continuous R-value	U-factor	Assembly Layers
R-0 Wall	Exterior Walls	Wood Framed Wall	2x4 @ 16 in. O. C.	R-0	None / None	0.361	Inside Finish: Gypsum Board Cavity / Frame: no insul. / 2x4 Exterior Finish: 3 Coat Stucco
R-15 Wall	Exterior Walls	Wood Framed Wall	2x4 @ 16 in. O. C.	R-15	None / None	0.095	Inside Finish: Gypsum Board Cavity / Frame: R-15 / 2x4 Exterior Finish: 3 Coat Stucco
Attic RoofExisting	Attic Roofs	Wood Framed Ceiling	2x4 @ 24 in. O. C.	R-0	None / 0	0.644	Roofing: Light Roof (Asphalt Shingle) Roof Deck: Wood Siding/sheathing/decking Cavity / Frame: no insul. / 2x4
Attic RoofAddition	Attic Roofs	Wood Framed Ceiling	2x4 @ 24 in. O. C.	R-0	None / 0	0.644	Roofing: Light Roof (Asphalt Shingle) Roof Deck: Wood Siding/sheathing/decking Cavity / Frame: no insul. / 2x4
R-0 Floor Crawlspace	Floors Over Crawlspace	Wood Framed Floor	2x8 @ 16 in. O. C.	R-0	None / None	0.218	Floor Surface: Carpeted Floor Deck: Wood Siding/sheathing/decking Cavity / Frame: no insul. / 2x8
R-19 Floor Crawlspace	Floors Over Crawlspace	Wood Framed Floor	2x10 @ 16 in. O. C.	R-19	None / None	0.046	Floor Surface: Carpeted Floor Deck: Wood Siding/sheathing/decking Cavity / Frame: R-19 / 2x10
R-19 Roof Attic	Ceilings (below attic)	Wood Framed Ceiling	2x4 @ 24 in. O. C.	R-19	None / None	0.049	Over Ceiling Joists: R-9.9 insul. Cavity / Frame: R-9.1 / 2x4 Inside Finish: Gypsum Board

Registration Number: Registration Date/Time: HERS Provider:

CA Building Energy Efficiency Standards - 2022 Residential Compliance Report Version: 2022.0.000 Schema Version: rev 20220901 Report Generated: 2023-08-03 08:37:00

CERTIFICATE OF COMPLIANCE - RESIDENTIAL PERFORMANCE COMPLIANCE METHOD **CF1R-PRF-01-E**

Project Name: Residential Addition & Remodel **Calculation Date/Time:** 2023-08-03T08:36:38-07:00 **(Page 7 of 10)**

Calculation Description: Title 24 Analysis **Input File Name:** dc 7211 view av.ribd22x

OPAQUE SURFACE CONSTRUCTIONS

01	02	03	04	05	06	07	08
Construction Name	Surface Type	Construction Type	Framing	Total Cavity R-value	Interior / Exterior Continuous R-value	U-factor	Assembly Layers
R-30 Roof Attic	Ceilings (below attic)	Wood Framed Ceiling	2x4 @ 24 in. O. C.	R-30	None / None	0.032	Over Ceiling Joists: R-20.9 insul. Cavity / Frame: R-9.1 / 2x4 Inside Finish: Gypsum Board

BUILDING ENVELOPE - HERS VERIFICATION

01	02	03	04	05
Quality Insulation Installation (QII)	High R-value Spray Foam Insulation	Building Envelope Air Leakage	CFM50	CFM50
Not Required	Not Required	N/A	n/a	n/a

WATER HEATING SYSTEMS

01	02	03	04	05	06	07	08	09	10	11	12
Name	System Type	Distribution Type	Water Heater Name	Number of Units	Solar Heating System	Compact Distribution	HERS Verification	Water Heater Name (#)	Status	Verified Existing Condition	Existing Water Heating System
DHW Sys 1	Domestic Hot Water (DHW)	Standard	DHW Heater 1	1	n/a	None	n/a	DHW Heater 1 (1)	Existing	No	

WATER HEATERS

01	02	03	04	05	06	07	08	09	10	11	12	13	14	15
Name	Heating Element Type	Tank Type	# of Units	Tank Vol. (gal)	Heating Efficiency Type	Efficiency	Rated Input Type	Input Rating or Pilot	Tank Insulation R-value (Int/Ext)	Standby Loss or Recovery Eff	1st Hr. Rating or Flow Rate	Tank Location	Status	Verified Existing Condition
DHW Heater 1	Gas	Small Storage	1	50	EF	0.57	Btu/Hr	75000	0	80	n/a		Existing	No

Registration Number: Registration Date/Time: HERS Provider:

CA Building Energy Efficiency Standards - 2022 Residential Compliance Report Version: 2022.0.000 Schema Version: rev 20220901 Report Generated: 2023-08-03 08:37:00

CERTIFICATE OF COMPLIANCE - RESIDENTIAL PERFORMANCE COMPLIANCE METHOD **CF1R-PRF-01-E**

Project Name: Residential Addition & Remodel **Calculation Date/Time:** 2023-08-03T08:36:38-07:00 **(Page 8 of 10)**

Calculation Description: Title 24 Analysis **Input File Name:** dc 7211 view av.ribd22x

WATER HEATING - HERS VERIFICATION

01	02	03	04	05	06	07
Name	Pipe Insulation	Parallel Piping	Compact Distribution	Compact Distribution Type	Recirculation Control	Shower Drain Water Heat Recovery
DHW Sys 1 - 1/1	Not Required	Not Required	Not Required	None	Not Required	Not Required

SPACE CONDITIONING SYSTEMS

01	02	03	04	05	06	07	08	09	10	11	12
Name	System Type	Heating Unit Name	Heating Equipment Count	Cooling Unit Name	Cooling Equipment Count	Fan Name	Distribution Name	Required Thermostat Type	Status	Verified Existing Condition	Existing HVAC System
(e) FAU1	Heating and cooling system other	Heating Component 1	1	Cooling Component 1	1	HVAC Fan 1	Air Distribution System 1	n/a	Existing	No	

HVAC - HEATING UNIT TYPES

01	02	03	04
Name	System Type	Number of Units	Heating Efficiency
Heating Component 1	Central gas furnace	1	AFUE-80

HVAC - COOLING UNIT TYPES

01	02	03	04	05	06	07	08	09
Name	System Type	Number of Units	Efficiency Metric	Efficiency EER/EER2/CEER	Efficiency SEER/SEER2	Zonally Controlled	Mulit-speed Compressor	HERS Verification
Cooling Component 1	No Cooling	1		n/a	n/a	Not Zonal	Single Speed	n/a

Registration Number: Registration Date/Time: HERS Provider:

CA Building Energy Efficiency Standards - 2022 Residential Compliance Report Version: 2022.0.000 Schema Version: rev 20220901 Report Generated: 2023-08-03 08:37:00

CERTIFICATE OF COMPLIANCE - RESIDENTIAL PERFORMANCE COMPLIANCE METHOD **CF1R-PRF-01-E**

Project Name: Residential Addition & Remodel **Calculation Date/Time:** 2023-08-03T08:36:38-07:00 **(Page 9 of 10)**

Calculation Description: Title 24 Analysis **Input File Name:** dc 7211 view av.ribd22x

HVAC - DISTRIBUTION SYSTEMS

01	02	03	04	05	06	07	08	09	10	11	12	13	14	15	16
Name	Type	Design Type	Duct Ins. R-value		Duct Location		Surface Area		Bypass Duct	Duct Leakage	HERS Verification	Status	Verified Existing Condition	Existing Distribution system	New Ducts 25 ft
			Supply	Return	Supply	Return	Supply	Return							
Air Distribution System 1	Unconditioned attic	Non-Verified	R-6	R-6	Attic	Attic	n/a	n/a	No Bypass Duct	Existing (not specified)	Air Distribution System 1-hers-dist	Existing + New	No		No

HVAC - FAN SYSTEMS

01	02	03	04
Name	Type	Fan Power (Watts/CFM)	Name
HVAC Fan 1	HVAC Fan	0.45	n/a

7211 View Ave.
El Cerrito, CA 94530

DRAFTING CAFE
ARCHITECTS
T: 510-251-2511
F: 510-735-9797
E: info@draftingcafe.com
www.draftingcafe.com

LICENSED ARCHITECT ETHAN C ANDERSEN C-34235 Exp. May 31, 2025 RENEWAL DATE STATE OF CALIFORNIA

REVISIONS		
NO.	DESCRIPTION	DATE

T24 Compliance

DATE Sep 20, 2023

PROJECT 21113

SCALE 1/4" = 1'-0"

T24.1

CERTIFICATE OF COMPLIANCE - RESIDENTIAL PERFORMANCE COMPLIANCE METHOD **CF1R-PRF-01-E**

Project Name: Residential Addition & Remodel **Calculation Date/Time:** 2023-08-03T08:36:38-07:00 **(Page 10 of 10)**

Calculation Description: Title 24 Analysis **Input File Name:** dc 7211 view av.ribd22x

DOCUMENTATION AUTHOR'S DECLARATION STATEMENT

1. I certify that this Certificate of Compliance documentation is accurate and complete.

Documentation Author Name: Robert Mao, PE, CEA	Documentation Author Signature:
Company: The Energy Consulting Company	Signature Date: 8/3/2023
Address: 6367 Swainland Road	CEA/ HERS Certification Identification (If applicable):
City/State/Zip: Oakland, CA 94611	Phone: 510-387-2756

RESPONSIBLE PERSON'S DECLARATION STATEMENT

I certify the following under penalty of perjury, under the laws of the State of California:

1. I am eligible under Division 3 of the Business and Professions Code to accept responsibility for the building design identified on this Certificate of Compliance.
2. I certify that the energy features and performance specifications identified on this Certificate of Compliance conform to the requirements of Title 24, Part 1 and Part 6 of the California Code of Regulations.
3. The building design features or system design features identified on this Certificate of Compliance are consistent with the information provided on other applicable compliance documents, worksheets, calculations, plans and specifications submitted to the enforcement agency for approval with this building permit application.

Responsible Designer Name:	Responsible Designer Signature:
Company: DRAFTING CAFE ARCHITECTS	Date Signed: 8.18.2023
Address: 2350 Saratoga Street - #155	License: C-34235
City/State/Zip: Alameda, CA 94501	Phone: 510-251-2511

Registration Number:	Registration Date/Time:	HERS Provider:
CA Building Energy Efficiency Standards - 2022 Residential Compliance	Report Version: 2022.0.000 Schema Version: rev 20220901	Report Generated: 2023-08-03 08:37:00

RESIDENTIAL MEASURES SUMMARY — RMS-1

Project Name	Building Type		Date
Residential Addition & Remodel	☑ Single Family ☐ Multi Family ☐ Addition Alone ☑ Existing+ Addition/Alteration		8/3/2023
Project Address	**California Energy Climate Zone**	**Total Cond. Floor Area / Addition**	**# of Units**
7211 View Avenue El Cerrito	CA Climate Zone 03	2,183 / 400	1

INSULATION

Construction	Type	Cavity	Area (ft^2)	Special Features	Status
Wall	Wood Framed	R 15	140		New
Wall	Wood Framed	R 15	70		New
Wall	Wood Framed	R 15	116		New
Wall	Wood Framed	R 15	142		New
Roof	Wood Framed Attic	R 30	400		New
Floor	Wood Framed w/Crawl Space	R 19	400		New

FENESTRATION — Total Area: 431 | Glazing Percentage: 19.7% | New/Altered Average U-Factor: 0.30

Orientation	Area(ft^2)	U-Fac	SHGC	Overhang	Sidefins	Exterior Shades	Status
Front (SE)	150.0	0.580	0.65	none	none	N/A	Existing
Left (SW)	29.0	0.580	0.65	none	none	N/A	Existing
Rear (NW)	132.0	0.580	0.65	none	none	N/A	Existing
Rear (NW)	50.0	0.300	0.80	none	none	N/A	New
Right (NE)	12.0	0.580	0.65	none	none	N/A	Existing
Left (SW)	40.0	0.300	0.80	none	none	N/A	New
Right (NE)	18.0	0.300	0.80	none	none	N/A	New

HVAC SYSTEMS

Qty.	Heating	Min. Eff	Cooling	Min. Eff	Thermostat	Status
1	Gas Central Furnace	80% AFUE	No Cooling	14.0 SEER	Setback	Existing

HVAC DISTRIBUTION

Location	Heating	Cooling	Duct Location	Duct R-Value	Status
(e) FAU	Ducted	Ducted	Attic	6.0	Altered

WATER HEATING

Qty.	Type	Gallons	Min. Eff	Distribution	Status

RESIDENTIAL MEASURES SUMMARY — RMS-1

Project Name	Building Type		Date
Residential Addition & Remodel	☑ Single Family ☐ Multi Family ☐ Addition Alone ☑ Existing+ Addition/Alteration		8/3/2023
Project Address	**California Energy Climate Zone**	**Total Cond. Floor Area / Addition**	**# of Units**
7211 View Avenue El Cerrito	CA Climate Zone 03	2,183 / 400	1

INSULATION

Construction	Type	Cavity	Area (ft^2)	Special Features	Status
Wall	Wood Framed	R 15	140		New
Wall	Wood Framed	R 15	70		New
Wall	Wood Framed	R 15	116		New
Wall	Wood Framed	R 15	142		New
Roof	Wood Framed Attic	R 30	400		New
Floor	Wood Framed w/Crawl Space	R 19	400		New

FENESTRATION — Total Area: 431 | Glazing Percentage: 19.7% | New/Altered Average U-Factor: 0.30

Orientation	Area(ft^2)	U-Fac	SHGC	Overhang	Sidefins	Exterior Shades	Status

HVAC SYSTEMS

Qty.	Heating	Min. Eff	Cooling	Min. Eff	Thermostat	Status

HVAC DISTRIBUTION

Location	Heating	Cooling	Duct Location	Duct R-Value	Status

WATER HEATING

Qty.	Type	Gallons	Min. Eff	Distribution	Status

2022 Single-Family Residential Mandatory Requirements Summary

NOTE: Single-family residential buildings subject to the Energy Codes must comply with all applicable mandatory measures, regardless of the compliance approach used. Review the respective section for more information.
(04/2022)

Building Envelope:

§ 110.6(a)1:	**Air Leakage.** Manufactured fenestration, exterior doors, and exterior pet doors must limit air leakage to 0.3 CFM per square foot or less when tested per NFRC-400, ASTM E283, or AAMA/WDMA/CSA 101/I.S.2/A440-2011. *
§ 110.6(a)5:	**Labeling.** Fenestration products and exterior doors must have a label meeting the requirements of § 10-111(a).
§ 110.6(b):	**Field fabricated exterior doors and fenestration** products must use U-factors and solar heat gain coefficient (SHGC) values from Tables 110.6-A, 110.6-B, or JA4.5 for exterior doors. They must be caulked and/or weather-stripped.
§ 110.7:	**Air Leakage.** All joints, penetrations, and other openings in the building envelope that are potential sources of air leakage must be caulked, gasketed, or weather stripped.
§ 110.8(a):	**Insulation Certification by Manufacturers.** Insulation must be certified by the Department of Consumer Affairs, Bureau of Household Goods and Services (BHGS).
§ 110.8(g):	**Insulation Requirements for Heated Slab Floors.** Heated slab floors must be insulated per the requirements of § 110.8(g).
§ 110.8(i):	**Roofing Products Solar Reflectance and Thermal Emittance.** The thermal emittance and aged solar reflectance values of the roofing material must meet the requirements of § 110.8(i) and be labeled per §10-113 when the installation of a cool roof is specified on the CF1R.
§ 110.8(j):	**Radiant Barrier.** When required, radiant barriers must have an emittance of 0.05 or less and be certified to the Department of Consumer Affairs.
§ 150.0(a):	**Roof Deck, Ceiling and Rafter Roof Insulation.** Roof decks in newly constructed attics in climate zones 4 and 8-16 area-weighted average U-factor not exceeding U-0.184. Ceiling and rafter roofs minimum R-22 insulation in wood-frame ceiling; or area-weighted average U-factor must not exceed 0.043. Rafter roof alterations minimum R-19 or area-weighted average U-factor of 0.054 or less. Attic access doors must have permanently attached insulation using adhesive or mechanical fasteners. The attic access must be gasketed to prevent air leakage. Insulation must be installed in direct contact with a roof or ceiling which is sealed to limit infiltration and exfiltration, as specified in § 110.7, including but not limited to placing insulation either above or below the roof deck or on top of a drywall ceiling. *
§ 150.0(b):	**Loose-fill Insulation.** Loose fill insulation must meet the manufacturer's required density for the labeled R-value.
§ 150.0(c):	**Wall Insulation.** Minimum R-13 insulation in 2x4 inch wood framing wall or have a U-factor of 0.102 or less, or R-20 in 2x6 inch wood framing or have a U-factor of 0.071 or less. Opaque non-framed assemblies must have an overall assembly U-factor not exceeding 0.102. Masonry walls must meet Tables 150.1-A or B. *
§ 150.0(d):	**Raised-floor Insulation.** Minimum R-19 insulation in raised wood framed floor or 0.037 maximum U-factor. *
§ 150.0(f):	**Slab Edge Insulation.** Slab edge insulation must meet all of the following: have a water absorption rate, for the insulation material alone without facings, no greater than 0.3 percent; have a water vapor permeance no greater than 2.0 perm per inch; be protected from physical damage and UV light deterioration; and, when installed as part of a heated slab floor, meet the requirements of § 110.8(g).
§ 150.0(g)1:	**Vapor Retarder.** In climate zones 1 through 16, the earth floor of unvented crawl space must be covered with a Class I or Class II vapor retarder. This requirement also applies to controlled ventilation crawl space for buildings complying with the exception to §150.0(d).
§ 150.0(g)2:	**Vapor Retarder.** In climate zones 14 and 16, a Class I or Class II vapor retarder must be installed on the conditioned space side of all insulation in all exterior walls, vented attics, and unvented attics with air-permeable insulation.
§ 150.0(q):	**Fenestration Products.** Fenestration, including skylights, separating conditioned space from unconditioned space or outdoors must have a maximum U-factor of 0.45; or area-weighted average U-factor of all fenestration must not exceed 0.45. *

Fireplaces, Decorative Gas Appliances, and Gas Log:

§ 110.5(e)	**Pilot Light.** Continuously burning pilot lights are not allowed for indoor and outdoor fireplaces.
§ 150.0(e)1:	**Closable Doors.** Masonry or factory-built fireplaces must have a closable metal or glass door covering the entire opening of the firebox.
§ 150.0(e)2:	**Combustion Intake.** Masonry or factory-built fireplaces must have a combustion outside air intake, which is at least six square inches in area and is equipped with a readily accessible, operable, and tight-fitting damper or combustion-air control device. *
§ 150.0(e)3:	**Flue Damper.** Masonry or factory-built fireplaces must have a flue damper with a readily accessible control. *

Space Conditioning, Water Heating, and Plumbing System:

§ 110.0-§ 110.3:	**Certification.** Heating, ventilation, and air conditioning (HVAC) equipment, water heaters, showerheads, faucets, and all other regulated appliances must be certified by the manufacturer to the California Energy Commission. *
§ 110.2(a):	**HVAC Efficiency.** Equipment must meet the applicable efficiency requirements in Table 110.2-A through Table 110.2-N. *
§ 110.2(b):	**Controls for Heat Pumps with Supplementary Electric Resistance Heaters.** Heat pumps with supplementary electric resistance heaters must have controls that prevent supplementary heater operation when the heating load can be met by the heat pump alone; and in which the cut-on temperature for compression heating is higher than the cut-on temperature for supplementary heating, and the cut-off temperature for compression heating is higher than the cut-off temperature for supplementary heating.
§ 110.2(c):	**Thermostats.** All heating or cooling systems not controlled by a central energy management control system (EMCS) must have a setback thermostat. *
§ 110.3(c)3:	**Insulation.** Unfired service water heater storage tanks and solar water-heating backup tanks must have adequate insulation, or tank surface heat loss rating.
§ 110.3(c)6:	**Isolation Valves.** Instantaneous water heaters with an input rating greater than 6.8 kBtu per hour (2 kW) must have isolation valves with hose bibbs or other fittings on both cold and hot water lines to allow for flushing the water heater when the valves are closed.

2022 Single-Family Residential Mandatory Requirements Summary

§ 110.5:	**Pilot Lights.** Continuously burning pilot lights are prohibited for natural gas: fan-type central furnaces; household cooking appliances (except appliances without an electrical supply voltage connection with pilot lights that consume less than 150 Btu per hour); and pool and spa heaters. *
§ 150.0(h)1:	**Building Cooling and Heating Loads.** Heating and/or cooling loads are calculated in accordance with the ASHRAE Handbook, Equipment Volume, Applications Volume, and Fundamentals Volume; the SMACNA Residential Comfort System Installation Standards Manual; or the ACCA Manual J using design conditions specified in § 150.0(h)2.
§ 150.0(h)3A:	**Clearances.** Air conditioner and heat pump outdoor condensing units must have a clearance of at least five feet from the outlet of any dryer.
§ 150.0(h)3B:	**Liquid Line Drier.** Air conditioners and heat pump systems must be equipped with liquid line filter driers if required, as specified by the manufacturer's instructions.
§ 150.0(j)1:	**Water Piping, Solar Water-heating System Piping, and Space Conditioning System Line Insulation.** All domestic hot water piping must be insulated as specified in § 609.11 of the California Plumbing Code. *
§ 150.0(j)2:	**Insulation Protection.** Piping insulation must be protected from damage, including that due to sunlight, moisture, equipment maintenance, and wind as required by §120.3(b). Insulation exposed to weather must be water retardant and protected from UV light (no adhesive tapes). Insulation covering chilled water piping and refrigerant suction piping located outside the conditioned space must include, or be protected by, a Class I or Class II vapor retarder. Pipe insulation buried below grade must be installed in a waterproof and non-crushable casing or sleeve.
§ 150.0(n)1:	**Gas or Propane Water Heating Systems.** Systems using gas or propane water heaters to serve individual dwelling units must designate a space at least 2.5' x 2.5' x 7' suitable for the future installation of a heat pump water heater, and meet electrical and plumbing requirements, based on the distance between this designated space and the water heater location; and a condensate drain no more than 2' higher than the base of the water heater
§ 150.0(n)3:	**Solar Water-heating Systems.** Solar water-heating systems and collectors must be certified and rated by the Solar Rating and Certification Corporation (SRCC), the International Association of Plumbing and Mechanical Officials, Research and Testing (IAPMO R&T), or by a listing agency that is approved by the executive director.

Ducts and Fans:

§ 110.8(d)3:	**Ducts.** Insulation installed on an existing space-conditioning duct must comply with § 604.0 of the California Mechanical Code (CMC). If a contractor installs the insulation, the contractor must certify to the customer, in writing, that the insulation meets this requirement.
§ 150.0(m)1:	**CMC Compliance.** All air-distribution system ducts and plenums must meet CMC §§ 601.0-605.0 and ANSI/SMACNA-006-2006 HVAC Duct Construction Standards Metal and Flexible 3rd Edition. Portions of supply-air and return-air ducts and plenums must be insulated to R-6.0 or higher; ducts located entirely in conditioned space as confirmed through field verification and diagnostic testing (RA3.1.4.3.8) do not require insulation. Connections of metal ducts and inner core of flexible ducts must be mechanically fastened. Openings must be sealed with mastic, tape, or other duct-closure system that meets the applicable UL requirements, or aerosol sealant that meets UL 723. The combination of mastic and either mesh or tape must be used to seal openings greater than ¼". If mastic or tape is used. Building cavities, air handler support platforms, and plenums designed or constructed with materials other than sealed sheet metal, duct board or flexible duct must not be used to convey conditioned air. Building cavities and support platforms may contain ducts; ducts installed in these spaces must not be compressed. *
§ 150.0(m)2:	**Factory-Fabricated Duct Systems.** Factory-fabricated duct systems must comply with applicable requirements for duct construction, connections, and closures; joints and seams of duct systems and their components must not be sealed with cloth back rubber adhesive duct tapes unless such tape is used in combination with mastic and draw bands.
§ 150.0(m)3:	**Field-Fabricated Duct Systems.** Field-fabricated duct systems must comply with applicable requirements for: pressure-sensitive tapes, mastics, sealants, and other requirements specified for duct construction.
§ 150.0(m)7:	**Backdraft Damper.** Fan systems that exchange air between the conditioned space and outdoors must have backdraft or automatic dampers.
§ 150.0(m)8:	**Gravity Ventilation Dampers.** Gravity ventilating systems serving conditioned space must have either automatic or readily accessible, manually operated dampers in all openings to the outside, except combustion inlet and outlet air openings and elevator shaft vents.
§ 150.0(m)9:	**Protection of Insulation.** Insulation must be protected from damage due tosunlight, moisture, equipment maintenance, and wind. Insulation exposed to weather must be suitable for outdoor service (e.g., protected by aluminum, sheet metal, painted canvas, or plastic cover). Cellular foam insulation must be protected as above or painted with a water retardant and solar radiation-resistant coating.
§ 150.0(m)10:	**Porous Inner Core Flex Duct.** Porous inner cores of flex ducts must have a non-porous layer or air barrier between the inner core and outer vapor barrier.
§ 150.0(m)11:	**Duct System Sealing and Leakage Test.** When space conditioning systems use forced air duct systems to supply conditioned air to an occupiable space, the ducts must be sealed and duct leakage tested, as confirmed through field verification and diagnostic testing, in accordance with Reference Residential Appendix RA3.1.
§ 150.0(m)12:	**Air Filtration.** Space conditioning systems with ducts exceeding 10 feet and the supply side of ventilation systems must have MERV 13 or equivalent filters. Filters for space conditioning systems must have a two inch depth or can be one inch if sized per Equation 150.0-A. Clean-filter pressure drop and labeling must meet the requirements in §150.0(m)12. Filters must be accessible for regular service. Filter racks or grilles must use gaskets, sealing, or other means to close gaps around the inserted filters to and prevents air from bypassing the filter. *

2022 Single-Family Residential Mandatory Requirements Summary

§ 150.0(m)13:	**Space Conditioning System Airflow Rate and Fan Efficacy.** Space conditioning systems that use ducts to supply cooling must have a hole for the placement of a static pressure probe, or a permanently installed static pressure probe in the supply plenum. Airflow must be ≥ 350 CFM per ton of nominal cooling capacity, and an air-handling unit fan efficacy ≤ 0.45 watts per CFM for gas furnace air handlers and ≤ 0.58 watts per CFM for all others. Small duct high velocity systems must provide an airflow ≥ 250 CFM per ton of nominal cooling capacity, and an air-handling unit fan efficacy ≤ 0.62 watts per CFM. Field verification testing is required in accordance with Reference Residential Appendix RA3.3. *

Ventilation and Indoor Air Quality:

§ 150.0(o)1:	**Requirements for Ventilation and Indoor Air Quality.** All dwelling units must meet the requirements of ASHRAE Standard 62.2, Ventilation and Acceptable Indoor Air Quality in Residential Buildings subject to the amendments specified in § 150.0(o)1. *
§ 150.0(o)1B:	**Central Fan Integrated (CFI) Ventilation Systems.** Continuous operation of CFI air handlers is not allowed to provide the whole-dwelling unit ventilation airflow required per §150.0(o)1C. A motorized damper(s) must be installed on the ventilation duct(s) that prevents all airflow through the space conditioning duct system when the damper(s) is closed andcontrolled per §150.0(o)1Biii&iv. CFI ventilation systems must have controls that track outdoor air ventilation run time, and either open or close the motorized damper(s) for compliance with §150.0(o)1C.
§ 150.0(o)1C:	**Whole-Dwelling Unit Mechanical Ventilation for Single-Family Detached and townhouses .** Single-family detached dwelling units, and attached dwelling units not sharing ceilings or floors with other dwelling units, occupiable spaces, public garages, or commercial spaces must have mechanical ventilation airflow specified in § 150.0(o)1Ci-iii.
§ 150.0(o)1G:	**Local Mechanical Exhaust.** Kitchens and bathrooms must have local mechanical exhaust; nonencloses kitchens must have demand-controlled exhaust system meeting requirements of §150.0(o)1Giii,enclosed kitchens and bathrooms can use demand-controlled or continuous exhaust meeting §150.0(o)1Giii-iv. Airflow must be measured by the installer per §150.0(o)1Gv, and rated for sound per §150.0(o)1Gvi. *
§ 150.0(o)1H&I:	**Airflow Measurement and Sound Ratings of Whole-Dwelling Unit Ventilation Systems.** The airflow required per § 150.0(o)1C must be measured by using a flow hood, flow grid, or other airflow measuring device at the fan's inlet or outlet terminals/grilles per Reference Residential Appendix RA3.7. Whole-Dwelling unit ventilation systems must be rated for sound per ASHRAE 62.2 §7.2 at no less than the minimum airflow rate required by §150.0(o)1C.
§ 150.0(o)2:	**Field Verification and Diagnostic Testing.** Whole-Dwelling Unit ventilation airflow, vented range hood airflow and sound rating, and HRV and ERV fan efficacy must be verified in accordance with Reference Residential Appendix RA3.7. Vented range hoods must be verified per Reference Residential Appendix RA3.7.4.3 to confirm if it is rated by HVI or AHAM to comply with the airflow rates and sound requirements per §150.0(o)1G

Pool and Spa Systems and Equipment:

§ 110.4(a):	**Certification by Manufacturers.** Any pool or spa heating system or equipment must be certified to have all of the following: compliance with the Appliance Efficiency Regulations and listing in MAEDbS; an on-off switch mounted outside of the heater that allows shutting off the heater without adjusting the thermostat setting; a permanent weatherproof plate or card with operating instructions; and must not use electric resistance heating. *
§ 110.4(b)1:	**Piping.** Any pool or spa heating system or equipment must be installed with at least 36 inches of pipe between the filter and the heater, or dedicated suction and return lines, or built-in or built-up connections to allow for future solar heating.
§ 110.4(b)2:	**Covers.** Outdoor pools or spas that have a heat pump or gas heater must have a cover.
§ 110.4(b)3:	**Directional Inlets and Time Switches for Pools.** Pools must have directional inlets that adequately mix the pool water, and a time switch that will allow all pumps to be set or programmed to run only during off-peak electric demand periods.
§ 110.5:	**Pilot Light.** Natural gas pool and spa heaters must not have a continuously burning pilot light.
§ 150.0(p):	**Pool Systems and Equipment Installation.** Residential pool systems or equipment must meet the specified requirements for pump sizing, flow rate, piping, filters, and valves. *

Lighting:

§ 110.9:	**Lighting Controls and Components.** All lighting control devices and systems, ballasts, and luminaires must meet the applicable requirements of § 110.9. *
§ 150.0(k)1A:	**Luminaire Efficacy.** All installed luminaires must meet the requirements in Table 150.0-A, except lighting integral to exhaust fans, kitchen range hoods, bath vanity mirrors, and garage door openers; navigation lighting less than 5 watts; and lighting internal to drawers, cabinets, and linen closets with an efficacy of at least 45 lumens per watt.
§ 150.0(k)1B:	**Screw based luminaires.** Screw based luminaires must contain lamps that comply with Reference Joint Appendix JA8. *
§ 150.0(k)1C:	**Recessed Downlight Luminaires in Ceilings.** Luminaires recessed into ceilings must not contain screw based sockets, must be airtight, and must be sealed with a gasket or caulk. California Electrical Code § 410.116 must also be met.
§ 150.0(k)1D:	**Light Sources in Enclosed or Recessed Luminaires.** Lamps and other separable light sources that are not compliant with the JA8 elevated temperature requirements, including marking requirements, must not be installed in enclosed or recessed luminaires.
§ 150.0(k)1E:	**Blank Electrical Boxes.** The number of electrical boxes that are more than five feet above the finished floor and do not contain a luminaire or other device shall be no more than the number of bedrooms. These boxes must be served by a dimmer, vacancy sensor control, low voltage wiring, or fan speed control.
§ 150.0(k)1F:	**Lighting Integral to Exhaust Fans.** Lighting integral to exhaust fans (except when installed by the manufacturer in kitchen exhaust hoods) must meet the applicable requirements of § 150.0(k). *

7211 View Ave.
El Cerrito, CA 94530

DRAFTING CAFE
ARCHITECTS
T: 510-251-2511
F: 510-735-9797
E: info@draftingcafe.com
www.draftingcafe.com

LICENSED ARCHITECT
ETHAN C ANDERSEN
C-34235
Exp. May 31, 2025
RENEWAL DATE
STATE OF CALIFORNIA

REVISIONS		
NO.	DESCRIPTION	DATE

T24 Compliance & Mandatory Measures

DATE Sep 20, 2023

PROJECT 21113

SCALE 1/4" = 1'-0"

T24.2

2022 Single-Family Residential Mandatory Requirements Summary

§ 150.0(k)1G:	**Screw based luminaires.** Screw based luminaires must contain lamps that comply with Reference Joint Appendix JA8. *
§ 150.0(k)1H:	**Light Sources in Enclosed or Recessed Luminaires.** Lamps and other separable light sources that are not compliant with the JA8 elevated temperature requirements, including marking requirements, must not be installed in enclosed or recessed luminaires.
§ 150.0(k)1I:	**Light Sources in Drawers, Cabinets, and Linen Closets.** Light sources internal to drawers, cabinetry or linen closets are not required to comply with Table 150.0-A or be controlled by vacancy sensors provided that they are rated to consume no more than 5 watts of power, emit no more than 150 lumens, and are equipped with controls that automatically turn the lighting off when the drawer, cabinet or linen closet is closed.
§ 150.0(k)2A:	**Interior Switches and Controls.** All forward phase cut dimmers used with LED light sources must comply with NEMA SSL 7A.
§ 150.0(k)2B:	**Interior Switches and Controls.** Exhaust fans must be controlled separately from lighting systems. *
§ 150.0(k)2A:	**Accessible Controls.** Lighting must have readily accessible wall-mounted controls that allow the lighting to be manually turned on and off. *
§ 150.0(k)2B:	**Multiple Controls.** Controls must not bypass a dimmer, occupant sensor, or vacancy sensor function if the dimmer or sensor is installed to comply with § 150.0(k).
§ 150.0(k)2C:	**Mandatory Requirements.** Lighting controls must comply with the applicable requirements of § 110.9.
§ 150.0(k)2D:	**Energy Management Control Systems.** An energy management control system (EMCS) may be used to comply with dimming, occupancy, and control requirements if it provides the functionality of the specified control per § 110.9 and the physical controls specified in § 150.0(k)2A.
§ 150.0(k)2E:	**Automatic Shutoff Controls.** In bathrooms, garages, laundry rooms, utility rooms and walk-in closets, at least one installed luminaire must be controlled by an occupancy or vacancy sensor providing automatic-off functionality. Lighting inside drawers and cabinets with opaque fronts or doors must have controls that turn the light off when the drawer or door is closed.
§ 150.0(k)2F:	**Dimmers.** Lighting in habitable spaces (e.g., living rooms, dining rooms, kitchens, and bedrooms) must have readily accessible wall-mounted dimming controls that allow the lighting to be manually adjusted up and down. Forward phase cut dimmers controlling LED light sources in these spaces must comply with NEMA SSL 7A.
§ 150.0(k)2K:	**Independent controls.** Integrated lighting of exhaust fans shall be controlled independently from the fans. Lighting under cabinets or shelves, lighting in display cabinets, and switched outlets must be controlled separately from ceiling-installed lighting.
§ 150.0(k)3A:	**Residential Outdoor Lighting.** For single-family residential buildings, outdoor lighting permanently mounted to a residential building, or to other buildings on the same lot, must have a manual on/off switch and either a photocell and motion sensor or automatic time switch control) or an astronomical time clock. An energy management control system that provides the specified control functionality and meets all applicable requirements may be used to meet these requirements.
§ 150.0(k)4:	**Internally Illuminated address signs.** Internally illuminated address signs must either comply with § 140.8 or consume no more than 5 watts of power.
§ 150.0(k)5:	**Residential Garages for Eight or More Vehicles.** Lighting for residential parking garages for eight or more vehicles must comply with the applicable requirements for nonresidential garages in §§ 110.9, 130.0, 130.1, 130.4, 140.6, and 141.0.

Solar Readiness:

§ 110.10(a)1:	**Single-family Residences.** Single-family residences located in subdivisions with 10 or more single-family residences and where the application for a tentative subdivision map for the residences has been deemed complete and approved by the enforcement agency, which do not have a photovoltaic system installed, must comply with the requirements of § 110.10(b)-(e).
§110.10(b)1A:	**Minimum Solar Zone Area.** The solar zone must have a minimum total area as described below. The solar zone must comply with access, pathway, smoke ventilation, and spacing requirements as specified in Title 24, Part 9 or other parts of Title 24 or in any requirements adopted by a local jurisdiction. The solar zone total area must be comprised of areas that have no dimension less than 5 feet and are no less than 80 square feet each for buildings with roof areas less than or equal to 10,000 square feet or no less than 160 square feet each for buildings with roof areas greater than 10,000 square feet. For single-family residences, the solar zone must be located on the roof or overhang of the building and have a total area no less than 250 square feet. *
§ 110.10(b)2:	**Azimuth.** All sections of the solar zone located on steep-sloped roofs must have an azimuth between 90-300° of true north.
§ 110.10(b)3A:	**Shading.** The solar zone must not contain any obstructions, including but not limited to: vents, chimneys, architectural features, and roof mounted equipment.
§ 110.10(b)3B:	**Shading.** Any obstruction located on the roof or any other part of the building that projects above a solar zone must be located at least twice the horizontal distance of the height difference between the highest point of the obstruction and the horizontal projection of the nearest point of the solar zone, measured in the vertical plane. *
§ 110.10(b)4:	**Structural Design Loads on Construction Documents.** For areas of the roof designated as a solar zone, the structural design loads for roof dead load and roof live load must be clearly indicated on the construction documents.
§ 110.10(c):	**Interconnection Pathways.** The construction documents must indicate: a location reserved for inverters and metering equipment and a pathway reserved for routing of conduit from the solar zone to the point of interconnection with the electrical service; and for single-family residences and central water-heating systems, a pathway reserved for routing plumbing from the solar zone to the water-heating system.
§ 110.10(d):	**Documentation.** A copy of the construction documents or a comparable document indicating the information from § 110.10(b)-(c) must be provided to the occupant.
§ 110.10(e)1:	**Main Electrical Service Panel.** The main electrical service panel must have a minimum busbar rating of 200 amps.
§ 110.10(e)2:	**Main Electrical Service Panel.** The main electrical service panel must have a reserved space to allow for the installation of a double pole circuit breaker for a future solar electric installation. The reserved space must be permanently marked as "For Future Solar Electric."

Electric and Energy Storage Ready:

2022 Single-Family Residential Mandatory Requirements Summary

§ 150.0(s)	**Energy Storage System (ESS) Ready.** All single-family residences must meet all of the following: Either ESS-ready interconnection equipment with backed up capacity of 60 amps or more and four or more ESS supplied branch circuits, or a dedicated raceway from the main service to a subpanel that supplies the branch circuits in § 150.0(s); at least four branch circuits must be identified and have their source collocated at a single panelboard suitable to be supplied by the ESS, with one circuit supplying the refrigerator, one lighting circuit near the primary exit, and one circuit supplying a sleeping room receptacle outlet; main panelboard must have a minimum busbar rating of 225 amps; sufficient space must be reserved to allow future installation of a system isolation equipment/transfer switch within 3' of the main panelboard, with raceways installed between the panelboard and the switch location to allow the connection of backup power source.
§ 150.0(t)	**Heat Pump Space Heater Ready.** Systems using gas or propane furnaces to serve individual dwelling units must include: A dedicated unobstructed 240V branch circuit wiring installed within 3' of the furnace with circuit conductors rated at least 30 amps with the blank cover identified as "240V ready;" and a reserved main electrical service panel space to allow for the installation of a double pole circuit breaker permanently marked as "For Future 240V use."
§ 150.0(u)	**Electric Cooktop Ready.** Systems using gas or propane cooktop to serve individual dwelling units must include: A dedicated unobstructed 240V branch circuit wiring installed within 3' of the cooktop with circuit conductors rated at least 50 amps with the blank cover identified as "240V ready;" and a reserved main electrical service panel space to allow for the installation of a double pole circuit breaker permanently marked as "For Future 240V use."
§ 150.0(v)	**Electric Clothes Dryer Ready.** Clothes dryer locations with gas or propane plumbing to serve individual dwelling units must include: A dedicated unobstructed 240V branch circuit wiring installed within 3' of the dryer location with circuit conductors rated at least 30 amps with the blank cover identified as "240V ready;" and a reserved main electrical service panel space to allow for the installation of a double pole circuit breaker permanently marked as "For Future 240V use."

*Exceptions may apply.

HVAC SYSTEM HEATING AND COOLING LOADS SUMMARY

Project Name: Residential Addition & Remodel
Date: 8/3/2023
System Name: (e) FAU
Floor Area: 2,183

ENGINEERING CHECKS		SYSTEM LOAD	COIL COOLING PEAK			COIL HTG. PEAK	
Number of Systems	1						
Heating System			**CFM**	**Sensible**	**Latent**	**CFM**	**Sensible**
Output per System	55,000	**Total Room Loads**	2,103	41,208	913	1,359	51,237
Total Output (Btuh)	55,000	**Return Vented Lighting**		0			
Output (Btuh/sqft)	25.2	**Return Air Ducts**		1,950			2,772
Cooling System		**Return Fan**		0			0
Output per System	0	**Ventilation**	0	0	0	0	0
Total Output (Btuh)	0	**Supply Fan**		0			0
Total Output (Tons)	0.0	**Supply Air Ducts**		1,950			2,772
Total Output (Btuh/sqft)	0.0						
Total Output (sqft/Ton)	0.0	**TOTAL SYSTEM LOAD**		45,108	913		56,782
Air System							
CFM per System	1,000	**HVAC EQUIPMENT SELECTION**					
Airflow (cfm)	1,000	Gas FAU		0	0		55,000
Airflow (cfm/sqft)	0.46						
Airflow (cfm/Ton)	0.0						
Outside Air (%)	0.0%	**Total Adjusted System Output** (Adjusted for Peak Design conditions)		0	0		55,000
Outside Air (cfm/sqft)	0.00						
Note: values above given at ARI conditions		**TIME OF SYSTEM PEAK**		Aug 3 PM			Jan 1 AM

HEATING SYSTEM PSYCHROMETRICS (Airstream Temperatures at Time of Heating Peak)

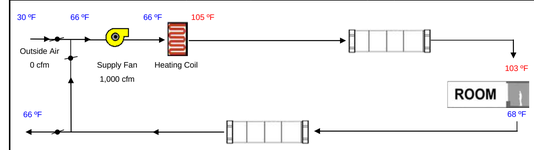

COOLING SYSTEM PSYCHROMETRICS (Airstream Temperatures at Time of Cooling Peak)

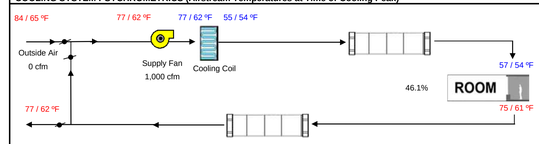

ZONE LOAD SUMMARY

Project Name: *Residential Addition & Remodel*
Date: *8/3/2023*
System Name: *(e) FAU*
Floor Area: *2,183*

ZONE LOAD SUMMARY

			ZONAL SYSTEM					COOLING PEAK				HEATING PEAK	
ZONE NAME	**SYSTEM NAME**	**Mult.**	**CFM**	**Sensible**	**Latent**	**Heating**	**OA CFM**	**Peak Hr**	**CFM**	**Sensible**	**Latent**	**CFM**	**Sensible**
Existing		*1.0*					*0*	*Aug 3 PM*	*1,723*	*33,756*	*745*	*1,232*	*46,452*
Addition		*1.0*					*0*	*Aug 3 PM*	*380*	*7,452*	*167*	*127*	*4,785*
		TOTALS		*0*	*0*	*0*	*0*	*Aug 3 PM*		*41,208*	*913*		*51,237*
										(BLOCK LOAD)			

7211 View Ave.
El Cerrito, CA 94530

DRAFTING CAFE
ARCHITECTS
T: 510-251-2511
F: 510-735-9797
E: info@draftingcafe.com
www.draftingcafe.com

LICENSED ARCHITECT
ETHAN C ANDERSEN
C-34235
May 31, 2025
RENEWAL DATE
STATE OF CALIFORNIA

REVISIONS		
NO.	DESCRIPTION	DATE

T24 Mandatory Measures

DATE: Sep 20, 2023
PROJECT: 21113
SCALE: 1/4" = 1'-0"

T24.3

7211 View

7211 View Avenue
El Cerrito, CA 94530

STANDARD DETAILS

9 TYPICAL NOTCHING & BORING

PENETRATIONS IN TOP PLATES & SILL PLATES

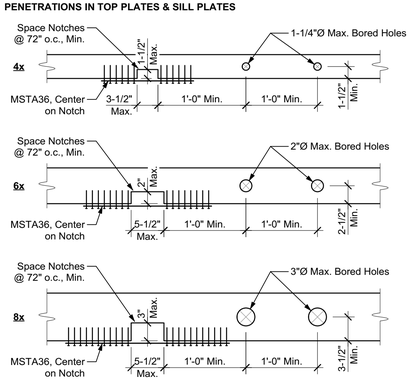

NOTCHING LIMITS FOR WOOD STUDS

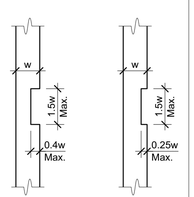

BORING LIMITS FOR WOOD STUDS

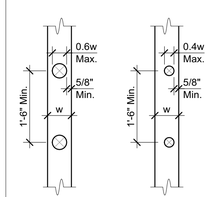

6 TYPICAL FLOOR / ROOF NAILING

Nailing per Plan w/ Spcg. Denoted as **@ A", B", C"**
A = Boundary Nailing
B = Edge Nailing
C = Field

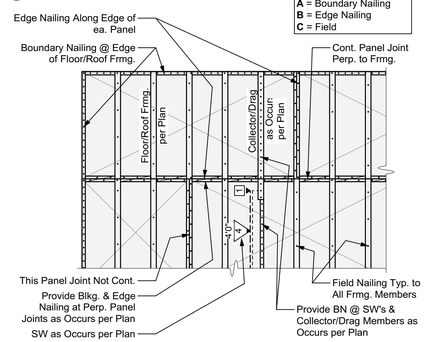

4 TYPICAL CONCRETE SLAB JOINTS

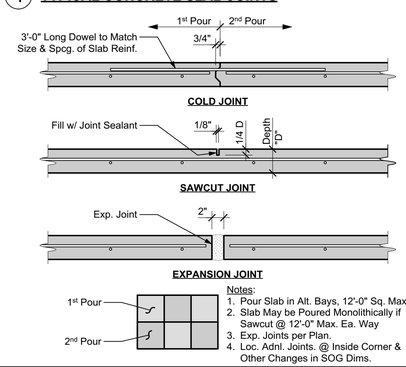

Notes:
1. Pour Slab in Alt. Bays, 12'-0" Sq. Max.
2. Slab May be Poured Monolithically if Sawcut @ 12'-0" Max. Ea. Way
3. Exp. Joints per Plan.
4. Loc. Adnl. Joints. @ Inside Corner & Other Changes in SOG Dims.

1 TYPICAL REINFORCING BAR BENDS

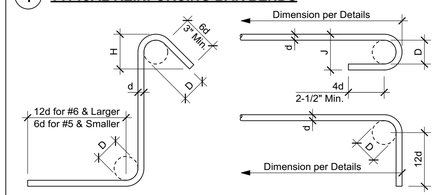

STANDARD TIES & STIRRUPS

Bar Size	D	H (Approx.)
#3	1-1/2"	3"
#4	2"	3"
#5	2-1/2"	3-3/4"
#6	4-1/2"	4-1/2"
#7	5-1/4"	5-1/4"
#8	6"	6"

STANDARD END HOOKS

Bar Size	D	J
#3	2-1/4"	3"
#4	3"	4"
#5	3-3/4"	5"
#6	4-1/2"	6"
#7	5-1/4"	7"
#8	6"	8"

Note:
All Bar Bend Diameters & End Lengths Must Conform to the CRSI Manual of Standard Practice

7 TYPICAL 2x TOP PLATE SPLICE

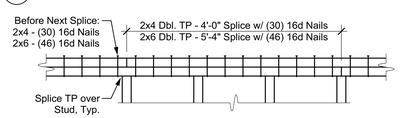

NAIL SPLICE

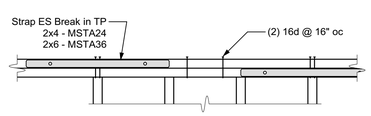

STRAP SPLICE

5 TYP. PENETRATION THROUGH FOUNDATION

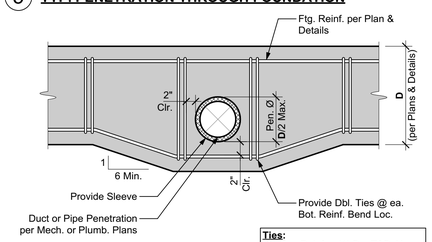

DO NOT Locate Pen. w/n 24" of Any Holdowns

Ties:
Ftg. Reinf. = (1) Bar T&B, Use #3 Vert. w/ 180º Hook ea. End
Ftg. Reinf. > (1) Bar T&B, Use #3 Stirrup w/ 135º Hooks @ Top

2 STD. DEVELOPMENT LENGTHS & LAP SPLICES

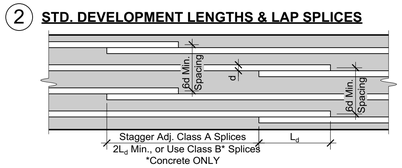

CONCRETE f'c = 2500 psi			
Bar Size	Length of Lap: Ld & Class A	Length of Lap: Class B	Hook Embed Ldh
#3	15 "	19 "	7"
#4	19 "	25 "	10"
#5	24 "	31 "	14"
#6	29 "	37 "	18"
#7	41 "	54 "	22"
#8	47 "	61 "	27"

MASONRY f'm = 1500 psi		
Bar Size	Length of Lap, Ld	Hook Embed Ldh
#3	12 "	5 "
#4	20 "	7 "
#5	31 "	8 "
#6	59 "	10 "
#7	80 "	11 "
#8	121 "	13 "

TYPICAL SHEAR WALL FRAMING NOTES:

1. Single sided shear walls may be placed on EITHER side of the framed wall.
2. Sill plates on masonry or concrete to be pressure treated per Timber / Lumber specifications. Sill plate thickness per SW Sched.
3. Wall studs and blkg. are required at all adjoining panel edges. Thickness of wall studs and blkg. at panel edges per SW Sched.
4. Where plywood is applied on both faces of a wall, edge nails shall be staggered on adjacent panel edges OR panel joints shall be offset to fall on different framing members. Plywood joint and sill plate nailing shall be staggered in all cases.
5. Plywood panels shall butt along centerlines of framing members. Minimum plywood dimension for shearwall shall be 12".
6. Nails shall be located at least 3/8" from all panel edges.
7. The use of pneumatic nail guns for shear wall nailing is subject to continued satisfactory jobsite performance and subject to the review and approval by the Engineer of Record and/or Building Inspector. If the nail heads penetrate the outer ply more than would be normal for a hand held hammer, or if the minimum edge distances are not maintained, the performance will be deemed as unsatisfactory and the continued use of pneumatic nail for shear wall nailing will not be permitted.
8. At all bearing walls (both exterior and interior walls) not noted as shear walls, continuous full depth blocking shall be provided between joists and rafters with LTP4 or A35 to top plates @ 32" oc at floors and 48" oc at roofs, unless noted otherwise per plan.
9. Refer to material specifications for additional framing requirements.

SHEAR WALL LEGEND

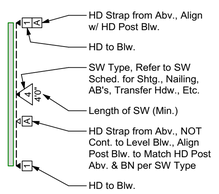

Refer to Plans for Specific Transfer & Connection Detail at each Shear Wall Location

10 TYPICAL SHEAR WALL INTERSECTIONS

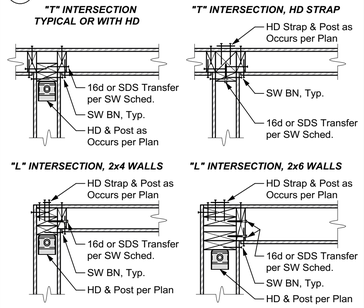

8 TYPICAL SHEAR WALL FRAMING

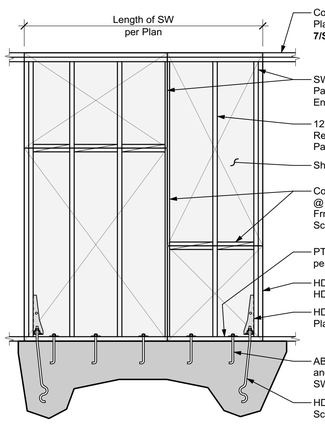

SHEAR WALL ELEVATION

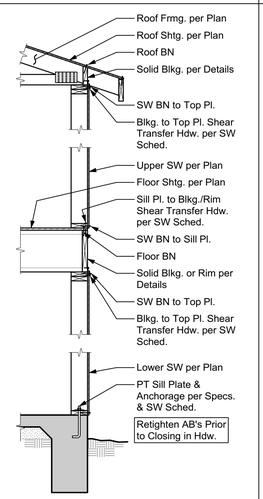

SHEAR WALL SECTION

3 TYPICAL WOOD FRAMED OPENING

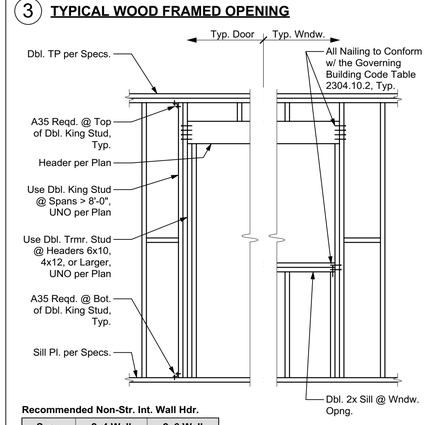

Recommended Non-Str. Int. Wall Hdr.

Span	2x4 Wall	2x6 Wall
< 4'-0"	Dbl. 2x4 Flat	Dbl. 2x6 Flat
< 6'-0"	4x4	4x6 Flat
< 8'-0"	4x6	6x6
> 8'-0"	Span in Feet Equals Beam Depth in Inches	

ABBREVIATIONS

AB	Anchor Bolt	Mas.	Masonry
A&B	Above and Below	Max.	Maximum
Abv.	Above	MB	Machine Bolt
Adn.	Addition (al)	MF	Moment Frame
Adj.	Adjacent,Adjustable	Mfr.	Manufacture(r)
Alt.	Alternate (ive)	Min.	Minimum, Minute
Appd.	Approved	Mod.	Modif(y), (ication)
Arch.	Architect(ural)	Mtl.	Metal
Avg.	Average	(N)	New
Bdry.	Boundary	N/A	Not Applicable
Bldg.	Building	Nat.	Natural
Blk(g).	Block (ing)	NTS	Not to Scale
Bm.	Beam	o/	Over
BN	Boundary Nailing	oc	On Center
B-O	Bottom of	OD	Outside Diameter
BO	By Others	Opng.	Opening
Bot.	Bottom	Opp.	Opposite
Brg.	Bearing	Opt.	Optional
Btwn.	Between	Para.	Parallel
BW	Both Ways	PCF	Lbs per Cubic Ft.
Cant.	Cantilever(ed)	Pen.	Penetrate, (tion)
CIP	Cast in Place	Perf.	Perforated
CJ	Ceiling Joist	Perim.	Perimeter
CJP	Complete Joint Penetration	Perp.	Perpendicular
		Pl	Panel Index
CL	Center Line	PJP	Partial Joint Pen.
Clg.	Ceiling	PL	Plate
CMU	Conc. Masonry Unit	PLF	Lbs per Linear Ft.
Col.	Column	Ply.	Plywood
Com.	Common	Prep.	Prepare, (ation)
Comp.	Component	Press.	Pressure
Conc.	Concrete	Proj.	Project
Conn.	Connection	Prop.	Property
Const.	Construction	PSF	Lbs per Square Ft.
Cont.	Continue (ous)	PSI	Lbs per Square In.
Ctr.	Center	PT	Pressure-Treated
d	Penny	PV	Photovoltaic (Solar Panels)
Dbl.	Double		
Defl.	Deflection	R	Radius
Deg.	Degree	Rec(s).	Recommendation(s)
Demo.	Demolish(tion)	Rect.	Rectangular
Dep.	Depress(ed)	Ref.	Reference
DF	Douglas Fir	Reinf.	Reinforce(d), (ment),(ing)
Dia.	Diameter		
Diaph.	Diaphragm	Req(d).	Require(d)
Dif.	Different	Reqs.	Requirements
Dim.	Dimension	Ret.	Retain(ing)
Dist.	Distance	RJ	Roof Joist
DJ	Deck Joist	RR	Roof Rafter
DL	Dead Load	RW	Redwood
Dwg.	Drawing	SAD	See Arch Dwg's
(E)	Existing	Sched.	Schedule
Ea.	Each	Sgl.	Single
EF	Each Face	Shtg.	Sheathing
EFP	Equivalent Fluid Pressure	Sim.	Similar
		SIP	Str. Insulated Panel
Elev.	Elevator, Elevation	SM	Sheet Metal
Embed.	Embed(ed), (ment)	SMS	Sheet Metal Screw
Engr.	Engineer	SOG	Slab on Grade
EOR	Engineer of Record	Spec.	Specif(ed),(cations)
Eq.	Equal, Equivalent	Sq.	Square
ES	Each Side	SS	Structural Steel
EW	Each Way	Std.	Standard
Exp.	Expand, Expansion	Stgr.	Stagger(ed)
Ext.	Exterior	Stl.	Steel
Fdn.	Foundation	Struc.	Structure, (al)
FF	Finished Floor	SW	Shear Wall
FJ	Floor Joist	Sym.	Symmet(ry), (rical)
Flr(g).	Floor (ing)	T&B	Top and Bottom
FOC	Face of Concrete	T&G	Tongue and Groove
FOM	Face of Masonry	Temp.	Temporary
FOS	Face of Studs	Thk.	Thick(ness)
FOW	Face of Wall	Thru	Through
Frmg.	Framing	TN	Toe-Nail
Ft.	Foot, Feet	TP	Top Plate
Ftg.	Footing	T-O	Top of
Ga.	Gage, Gauge	TOB	Top of Beam
Galv.	Galvanized	TOC	Top of Concrete
GB	Grade Beam	TOG	Top of Grade
GC	General Contractor	TOM	Top of Masonry
GLB	Glulam Beam	TOS	Top of Steel
Gyp.	Gypsum	TOW	Top of Wall
HD	Holdown	TRU	To Remain Unchanged
Hdr.	Header		
Hdw.	Hardware	Trmr.	Trimmer Stud
Hgr.	Hanger	Typ.	Typical
Hor(iz).	Horizontal	UNO	Unless Noted Otherwise
Ht.	Height		
ID	Inside Diameter	Vert.	Vertical
In.	Inch(es)	VIF	Verify in Field
Insp.	Inspect(ion)	VWA	Verify with Arch
Int.	Interior	w/	With
Inv.	Invert, Inverted	w/n	Within
Jst.	Joist	w/o	Without
K	Kips (1,000 pounds)	WS	Wood Screw
KLF	Kips per Linear Ft.	Wndw.	Window
King	King Stud	Wt.	Weight
KP	King Post	WWF	Welded Wire Fabric
KSF	Kips per Square Ft.	Yd.	Yard
KSI	Kips per Square In.		
Lb(s).	Pound(s)	@	At
LL	Live Load	°	Degrees
Loc.	Location	Ø	Diameter
LW	Light Weight	>	Greater Than
		<	Less Than
		#	Number, Pound(s)
		/	Per
		%	Percent(age)
		±	Plus or Minus

PROJECT INFORMATION

CLIENT:
Ran Haimoff
7211 View Avenue
El Cerrito, CA 94530

ARCHITECT:
Drafting Cafe Architects
3007 E 12th St.
Oakland, CA 94601
(510) 251-2511

DESIGN PARAMETERS

GENERAL PARAMETERS

Building Code	2022 CBC *
Roof Loads	
Dead Loads (DL)	12 psf
Live Loads (LL)	20 psf
Floor Loads - Typ.	
Dead Loads (DL)	15 psf
Live Loads (LL)	40 psf

SOILS VALUES (Table 1806.2)

Bearing Pressure	1500 psf
Lateral Passive EFP	130 pcf
At-Rest EFP	60 pcf
Active EFP	40 pcf
Friction Coefficient	0.25
Expansion Index (EI)	Very High (Assumed)

WIND DESIGN BASIS

Ultimate Wind Speed, V_{ULT}	95 mph
Nominal Wind Speed, V_{ASD}	74 mph
Risk Category	II
Exposure	B
Importance Factor, I_w	1.00

SEISMIC DESIGN BASIS

Seismic Design Category	E
Site Class	D
Seismic Factors	
S_S / S_1	2.247 / 0.868
S_{DS} / S_{D1}	1.798 / 0.984
Risk Category	II
Importance Factor, I_e	1.00
Resisting System:	Wood Shear Walls
Response Mod. Coefficient, R	6.5
Design Base Shear	V = 0.277W
Analysis Procedure:	Eqv. Lateral Force (ASCE 7-16, T. 12.6-1)

* The 2022 California Building Code (CBC), based on the 2021 International Building Code (IBC), is the governing code in the State of California.

SHEET INDEX

Ashley&Vance ENGINEERING, INC.
1729B Telegraph Avenue
Oakland, CA 94612
(510) 473-2221
www.ashleyvance.com
CIVIL • STRUCTURAL

Engineer of Record:

REGISTERED PROFESSIONAL ENGINEER VICTOR RAMOS C 88568 06-30-24 CIVIL STATE OF CALIFORNIA

7211 View
7211 View Avenue
El Cerrito, CA 94530

Revision:

1	Permit Set	2 August 2023
2		
3		
4		
5		
6		
7		
8		
9		

Proj. Engr.: M. Occiano	Phone Ext.: 124
Proj. Mngr.: V. Ramos	Phone Ext.: 128
Date: 2 August 2023	Scale: 1/4"=1'-0"
A&V Job No.: 230215	

STRUCTURAL TITLE SHEET

S-1.1

Aug 2, 2023 8:55:07 PM

STATEMENT OF SPECIAL INSPECTIONS

1. This Statement of Special Inspection is submitted in fulfillment of the requirements of the Governing Building Code, section 1704 and 1705.
2. Special Inspections and Testings will be preformed in accordance with the approved plans and specifications, this statement and the Governing Building Code, Section 1704 , 1705 , 1707 , and 1708.
3. The schedule of Special Inspections summarizes the Special Inspections and tests required. Special Inspectors will refer to the approved plans and specifications for detailed special inspection requirements. Any additional tests and inspections required by the approved plans and specifications will also be performed.
4. Interim reports will be submitted to the Building Official and the Registered Design Professional in Responsible Charge in accordance with the Governing Building Code Section 1704.2.4.
5. A Final Report of Special Inspections documenting required Special Inspections, testing and correction of any discrepancies noted in the inspections shall be submitted prior to issuance of a Certificate of Use and Occupancy (Section 1704.2.4). The Final Report will document:
   (a) Required special inspections.
   (b) Correction of discrepancies noted in inspections.
6. The Owner recognizes his or her obligation to ensure that the construction complies with the approved permit documents and to implement this program of special inspections. In partial fulfillment of these obligations, the Owner will retain and directly pay for the Special Inspections as required in the Governing Building Code, Section 1704.2.
7. 1704.4 Contractor responsibility. Each contractor responsible for the construction of a main wind- or seismic force-resisting system, designated seismic system or a wind- or seismic force-resisting component listed in the statement of special inspections shall submit a written statement of responsibility to the building official and the owner or the owner's authorized agent prior to the commencement of work on the system or component. The contractor's statement of responsibility shall contain acknowledgement of awareness of the special requirements contained in the statement of special inspection.

SCHEDULE OF SPECIAL INSPECTIONS

Column Header Notation Used in Table:
C Indicates continuous inspection is required.
P Indicates periodic inspections are required. The notes and/or contract documents should clarify.

Box Entry Notation Used in Table:
X Is placed in the appropriate column to denote either "C" continuous or "P" periodic inspections.
-- Denotes a one-time activitiy or one whose frequency is defined in some other manner.

Additional details regarding inspections are provided in the project specifications or notes on the drawings.

Verification & Inspection	C	P	Notes
1705.3 - Concrete			
4. Inspect anchors post-installed in hardened concrete			
a. Adhesive anchors[1] installed in horizontally or upwardly inclinded orientations to resist sustained tension			
b. Mechanical anchors[2] and adhesive anchors[1] not defined in 4.a		X	
FOOTNOTES: 1. Prior to epoxy placement, it must be verified that the hole is clean, dry, and free of loose debris 2. Periodic inspection shall take place such that the installation of a minimum of two (2) anchors per each shear wall are observed			
1705.13.2 - Seismic Resistance - Structural Wood			
2. Inspect nailing, bolting, anchoring, and other fastening of elements of the main seismic force-resisting system, including wood shear walls, wood diaphragms, collectors (drag struts), braces, shear panels, and hold-downs		X	Inspection of shear walls and diaphragms with fasteners spaced greater than 4" oc is not required

SEISMIC REQUIREMENTS (Section 1705.13)

Description of seismic-force-resisting system and designated seismic systems subject to special inspections per Section 1705.13:

Light-framed walls sheathed with wood structural panels rated for shear resistance or steel sheets (ASCE 7, Table 12.2-1, Line A.15)

The extent of the main seismic-force-resisting system is defined in more detail in the construction documents.

NOTE: The Engineer of Record Shall Observe the Following Items:
1. Reinforcing Placement
2. Shearwalls and Floor Systems Used as Shear Diaphragms
3. Holdowns and Anchor Bolts

*At the Discretion of the Building Department, the Engineer of Record may be Retained to Perform the Required Visual Special Inspection for Epoxy Anchors

GENERAL NOTES

1. The following notes, details, schedules & specifications shall apply to all phases of this project unless specifically noted otherwise. Notes and details on the structural plans shall take precedence over general notes and typical details. Where no details are given, construction shall be as shown for similar work.
2. All drawings are considered to be part of the contract documents. The Contractor shall be responsible for the review and coordination of all drawings and specifications prior to the start of construction. Any discrepancies shall be brought to the attention of the Engineer prior to the start of construction so that a clarification can be issued. Any work performed in conflict with the contract documents or any applicable code requirements shall be corrected by the Contractor at no expense to the Owner or Engineer.
3. All information on existing conditions shown on the structural plans are based on best present knowledge available, but without guarantee of accuracy. The Contractor shall be responsible for the verifications of all dimension and conditions at the site. Any discrepancies between actual site conditions and information shown on the drawings or in the specifications shall be brought to the attention of the EOR prior to the start of construction.
4. Refer to the Architectural plans for the following:
   (a) Dimensions
   (b) Size and location of all interior and exterior wall locations.
   (c) Size and location of all floor, roof and wall openings
   (d) Size and location of all drains, slopes, depressions, steps, etc.
   (e) Specification of all finishes & waterproofing
   (f) All other non-structural elements
5. Refer to the mechanical, electrical and plumbing plans for the following:
   (a) Size and location of all equipment
   (b) Pipe runs, sleeves, hangers and trenches
   (c) All other mechanical, electrical or plumbing related elements
6. **DO NOT** scale structural plans. Contractor shall use all written dimensions on Architectural plans.
7. Construction materials shall be uniformly spread out if placed on floor or roof so as to not overload the framing. Load shall not exceed the design live load per square foot. It is the Contractor's responsibility to provide adequate shoring and/or bracing as required.
8. Specifications and detailing of all waterproofing and drainage items, while sometimes shown on the structural plans for general information purposes only, are solely the design responsibility of others.
9. The Engineer will not be responsible for and will not have control or charge of construction means, methods, techniques, sequences or procedures, or for safety precautions and programs in connection with the construction delineated by these plans. It should be understood that the Contractor or his/her agent(s) shall supervise and direct all work and shall be solely and completely responsible for all construction means, methods, techniques, sequences, procedures and conditions on the job site, including safety of all persons and property during the entire period of construction. Periodic observations by the Engineer, his staff or representatives are not intended to include verification of dimensions or review the adequacy of the Contractor's safety measures on or near the construction site.
10. Modifications of the plans, notes, details and specifications shall not be permitted without prior approval from the Engineer.
11. All workmanship shall conform to the best practice prevailing in the various trades performing the work. The Contractor shall be responsible for coordinating the work of all trades.
12. It is the Contractor's responsibility to ensure that only approved structural plans are used during the course of construction. The use of unapproved documents shall be at the contractor's own risk. Corrections of all work based on such documents shall be performed at the Contractor's expense.
13. These plans and specifications represent the structural design only. No information nor warranty is provided for the work of any other Consultant (Architect, Mechanical, Electrical, etc.). This includes, but is not limited to, waterproofing, drainage, ventilation, accessibility, or dimensions.

FOUNDATIONS

1. Refer to Structural Design Parameters section on sheet S-1.1 for all soil design values used in calculations.
2. Soils values per Table 1806.2 of the latest edition of the Governing Building Code.
3. Unexpected Soil Conditions: At the discretion of the engineer of record, or the local building department, a soils report may be required in the event that substandard material is discovered on site. If this occurs, contact Engineer of Record for further guidance.
4. All compaction, fill, backfilling and site preparation shall be performed in accordance with project soils report or the Governing Building Code Chapter 18 & Appendix J. All such work shall be performed under the supervision of the building official.
5. Excavate to required depths and dimensions (as indicated in the drawings), cut square and smooth with firm level bottoms. Care shall be taken not to over-excavate foundation at lower elevation and prevent disturbance of soils around high elevation.
6. Foundations shall be poured in neat excavations.
7. Excavate all foundations to required depths into compacted fill or natural soil (as per plans and details) and as verified by the building official.
8. All foundations shall be inspected and approved by the appropriate building official prior to forming and placement of reinforcing or concrete.
9. Foundations shall not be poured until all required reinforcing steel, framing hardware, sleeves, inserts, conduits, pipes, etc. and formwork is properly placed and inspected by the appropriate building official/inspector(s).
10. It is the responsibility of the contractor in charge of framing to properly position all holdown bolts, anchor bolts, column bases, and all other cast-in-place hardware. Refer to typical details. All hardware to be secured prior to foundation inspections.
11. The sides and bottoms of dry excavations must be moistened to optimum moisture content or just above, just prior to placing concrete. Conversely, de-water footings as required to remove standing water and to maintain optimum working conditions.
12. The Contractor shall be solely responsible for all excavation procedures including lagging, shoring, and the protection of adjacent property, structures, streets, and utilities in accordance with all federal, state and local safety ordinances. The Contractor shall provide for the design and installation of all cribbing, bracing and shoring required.

ROD AND REBAR EPOXY INSTALLATION

1. Special inspection is required, unless specifically noted otherwise. Special inspection services shall conform to the Governing Building Code, Chapter 17 and shall be provided by an ICC certified inspector or Building Department approved engineer. The Building Department reserves the right to waive or require special inspections. Nothing in these plans waives the Building Department's right to require special inspection at any point and on any material.
2. Epoxy for anchoring bolts, rods, and reinforcing bars shall be as follows:
   (a) Concrete: Hilti HIT RE 500 v3 (ICC ESR-3814), Hilti HY 200 (ICC ESR-3187), or Simpson SET-3G (ICC ESR-4057).
   (b) Full Grouted Masonry: Hilti HY 200 (ICC ESR-3187), or Hilti HY 270 (ICC 2682), or Simpson SET-3G (ICC ESR-4057).
   (c) Hollow Cell Masonry Units and Unreinforced Masonry: Hilti HY 270 (ICC 2682), or Simpson ET-HP (ICC ESR 3372).
3. Anchors shall be installed in accordance with the manufacturer's printed installation instructions by qualified personnel trained to install epoxy anchors.
4. Holes for post-installed anchors shall be drilled with a carbide tipped concrete/masonry drill bit using an electro-pneumatic hammer drill bit set in "rotation and hammer" mode. Hole diameter shall be 1/8" larger than the anchor diameter specified, unless noted otherwise. For installation in brick or hollow cell masonry units with a screen tube, the hole diameter shall be 1/4" larger than the anchor diameter, unless noted otherwise.
5. DO NOT drill through existing reinforcing. A small diameter test hole shall be drilled at the installation location. If existing reinforcing is encountered, the installation location shall be relocated to avoid conflict and the abandoned hole shall be filled with non-shrink grout or drypack. For holes drilled into columns and beams, remove the rebar cover in order to positively identify the rebar location such that the holes avoid the rebar. Other non-destructive means may be used to identify the positions and depth of reinforcing.
6. Holes shall be cleaned of dust and debris by blowing with 90 psi oil-free compressed air, brushing with a wire brush two times, and blowing with compressed air again to achieve a relatively dust-free wall surface.
7. The base material shall be a minimum of 28 days old, within a temperature range of 50ºF - 100ºF, and dry at the time of epoxy installation. The base material shall have a minimum strength as follows:
   (a) Concrete: 2,500 psi
   (b) Full Grouted Masonry: 2,000 psi
8. Fill each hole 1/2 - 2/3 full with epoxy, starting from the bottom of the hole to prevent air pockets. Withdraw the nozzle as the hole fills up with epoxy. Insert clean, oil-free anchor, turning slowly until the anchor contacts the bottom of the hole. DO NOT disturb anchor until fully cured. Cure time shall be per the manufacturer's installation instructions.

CONCRETE

1. All concrete shall have:
   (a) an ultimate compressive strength (f'c) of 3,000 psi at 28 days (UNO).
   (b) a maximum slump of 5" at point of placement.
   (c) a W/C ratio of 0.55 or less for all slabs, walls, and columns, and 0.60 or less for all foundations.
   (d) a normal dry-weight density (UNO).
2. Special inspection is NOT required as the foundations have been *designed* with f'c = 2,500 psi in accordance with the Governing Building Code, section 1705.3, exceptions 1, 2.1, and 2.3, unless explicitly specified herein, on the structural plans, or by the Building Department. At a minimum, special inspection is always required on:
   (a) structural slabs, flat plates
   (b) walls, columns, beams
   (c) piles, caissons
   (d) welding of reinforcement, installation of mechanical bar splice devices, epoxy application

   When required or specified, special inspection services shall conform to the Governing Building Code, Chapter 17 and shall be provided by an ICC certified inspector or Building Department approved engineer. The Building Department reserves the right to waive or require special inspections. Nothing in these plans waives the Building Department's right to require special inspection at any point and on any material.
3. Testing of materials used in concrete construction must be performed as noted on structural plans or at the request of the Building Department to determine if materials are quality specified. Tests of materials and of concrete shall be made by an approved agency and at the expense of the contractor; such tests shall be made in accordance with the standards listed in the Governing Building Code, Table 1705.3. When testing of concrete is required, four (4) test cylinders shall be taken from each 150 yards, or fraction thereof, poured in any one day. One (1) cylinder shall be tested at seven (7) days; two (2) at 28 days; one (1) shall be held in reserve. Where 4x8 cylinders are used, (5) test cylinders shall be taken, with (3) cylinders tested at 28 days. If Contractor elects to have additional tests performed for "early-break" results, additional test cylinders must be taken. At no time shall the Contractor instruct the testing agency to perform tests on a schedule different than above without the prior authorization of the Engineer. Contractor is responsible for complying with applicable testing requirements of theBuilding Department. Copies of all test reports shall be provided to Engineer and Building Department for review in a timely manner.
4. The Contractor shall remove and replace any concrete which fails to attain specified 28 day compressive strength if so directed by the Engineer. Any defects in the hardened concrete shall be repaired to the satisfaction of the Engineer and/or Architect or the hardened concrete shall be replaced at the Contractor's expense.
5. All concrete work shall conform with the Governing Building Code, Chapter 19.
6. All cement shall be Portland Cement Type I or II and shall conform to ASTM C150.
7. All aggregates shall conform to ASTM C33. Maximum aggregate sizes:
   (a) Footings: 1-1/2"
   (b) All other work: 3/4"
8. Where not specifically detailed, the minimum concrete cover on reinforcing steel shall be:
   (a) Permanently exposed to earth or weather
      i. Cast against earth: 3"
      ii. Cast against forms: 2"
   (b) Not exposed to earth or weather
      i. Slabs, walls, joists: 3/4"
      ii. Beams, girders, columns: 1-1/2"
9. The minimum lap splice length for all reinforcing steel shall be as noted in the typical details on sheet S-1.1. All lap splices to be staggered.
10. All reinforcing steel, anchor bolts, dowels, inserts, and any other hardware to be cast in concrete shall be well secured in position prior to foundation inspection. All hardware to be installed in accordance with respective manufacturer's specifications. Refer to architectural and structural plans for locations of embedded items.
11. Locations of all construction joints, other than specified on the structural plans, shall be approved by the Architect and Engineer prior to forming. Construction joints shall be thoroughly air and water cleaned and heavily roughened so as to expose coarse aggregates. All surfaces to receive fresh concrete shall be maintained continuously wet at least three (3) hours in advance of concrete placement. Unless specifically detailed or otherwise noted, construction and control joints shall be provided in all concrete slabs-on-grade. Joints shall be located such that the area does not exceed 400 sq. feet.
12. The Architect, Engineer and appropriate inspectors shall be notified in a timely manner for a reinforcement inspection prior to the placement of any concrete.
13. The Contractor shall obtain approval from the Architect and the Engineer prior to placing sleeves, pipes, ducts, chases, coring and opening on or through structural concrete beams, walls, floors, and roof slabs unless specifically detailed or noted on the plans. All piles or conduits passing through concrete members shall be sleeved with standard steel pipe sections.
14. The Contractor is responsible for design, installation, maintenance and removal of all formwork. Forms shall be properly constructed, sufficiently tight to prevent leakage, sufficiently strong, and braced to maintain their shape and alignment until no longer needed for concrete support. Joints in formwork shall be tightly fitted and blocked, and shall produce a finished concrete surface that is true and free from blemishes. Forms for exposed concrete shall be pre-approved by the Architect to ensure conformance with design intent.
15. Remove formwork in accordance with the following schedule:
   (a) Forms at slab edge: 1 day
   (b) Side forms at footings: 2 days
   (c) All other vertical surfaces: 7 days
   (d) Beams, columns, girders: 15 days
   (e) Elevated slabs: 28 days

   Engineer reserves the right to modify removal schedule above based on field observations, concrete conditions, and/or concrete test results.
16. Retaining walls shall not be backfilled until concrete has set a minimum of 14 days. Refer to structural plans for slab and/or framing installation sequencing.
17. All concrete (except slabs-on-grade 6" or less) shall be mechanically vibrated as it is placed. Vibrator to be operated by experienced personnel. The vibrator shall be used to consolidate the concrete. The vibrator shall not be used to convey concrete, nor shall it be placed on reinforcing and/or forms.
18. Concrete shall be maintained in a moist condition for a min. of five (5) days after placement.
19. Concrete shall not be permitted to free fall more than six (6) feet. For heights greater than six (6) feet, use tremie, pump or other method consistent with applicable standards.
20. When specified ultimate compressive strength is greater than 2500 psi, Contractor shall submit mix designs to Architect and Engineer for approval seven (7) days prior to placement. Mix designs shall be prepared by an approved testing laboratory. Sufficient data must be provided for all admixtures.
21. Refer to Architectural plans for locations of all dimensions, slab depressions, slopes, drains, curbs, and control joints.

REINFORCEMENT

1. Reinforcing steel shall be deformed, clean, free of rust, grease or any other material likely to impair concrete bond.
2. All bars shall conform to ASTM A615, Grade 60 minimum (UNO on structural plans). All weld wire fabric (WWF) shall conform to ASTM A185.
3. Reinforcing steel that is to be welded shall conform to ASTM A706. All welding of reinforcement shall be subject to special inspection.
4. Contractor shall take necessary steps (standard ties, anchorage devices, etc.) to secure all reinforcing steel in their true position and prevent displacement during concrete placement.
5. Fabrication, placement and installation of reinforcing steel shall conform to:
   (a) Concrete Reinforcing Steel Institute (CRSI) Manual of Standard Practice
   (b) the Governing Building Code.
6. Shop drawings for fabrication of reinforcing steel shall be approved by the Contractor and submitted to the Architect and Engineer for review and approval prior to fabrication. Shop drawings are not required for slabs-on-grade or foundations unless specifically noted on the structural plans.
7. Heating of reinforcing steel to aid in bending and shaping of bars is not permitted. All bends in reinforcing steel are to be made cold. All bend radii shall conform to CRSI Manual of Standard Practice.
8. Refer to Concrete and Masonry notes for specific minimum splice length and splice staggering requirements. Lap welded wire fabric (WWF) reinforcement two (2) modules minimum (UNO). All splices are to be staggered.

ROUGH CARPENTRY

1. Refer to latest edition of the Governing Building Code, Table 2304.10.2. for all minimum nailing requirements.
2. Refer to individual sections for applicable material specifications.
3. Fabricate, size, install, connect, fasten, bore, notch, and cut wood and plywood with joints true, tight, and well-nailed, screwed or bolted as required, all members to have solid bearing without being shimmed, unless noted otherwise. Set horizontal members subject to bending with the crown up. Install framing plumb, square, true and cut for full bearing. Splices are not permitted between bearings. Use full lengths unless otherwise specified.
4. Metal framing angles, anchor, clips, straps, ties, holdowns, etc. shall be mfg by Simpson Strong-Tie Co. No substitutions shall be permitted without prior approval of the Engineer.
5. All walls are to have continuous double 2x top plates spliced as followings unless specifically noted otherwise on the plans and details.
6. Wall Studs:
   (a) Unless specifically noted on the plan and details, use the following guidelines for wall framing:
      i. Use 2x4 studs at 16" oc for walls less than 9'-0" tall.
      ii. Walls 9'-0" to 16'-0" tall shall be constructed of 2x6 studs at 16" oc
      iii. Request specifically engineered wall details for walls greater than 16'-0" tall.
7. Blocking:
   (a) Provide min. one row of nominal 2" thick blocking of same width as stud, fitted snugly and spiked into studs at mid-height of partitions or walls over 8' high.
   (b) All foundation cripple walls (or "pony walls") less than 14" in height shall be solid blocking.
   (c) Rim blocking/rim board to be 1-1/4" minimum width x full depth at bearing walls, UNO per plans and details. Refer to shearwall section for additional rim/blocking requirements.
8. Notching:
   (a) Is not permitted of any structural member without prior approval
   (b) In exterior and bearing walls, notches shall not exceed 25% of the stud depth.
   (c) Non-bearing partition walls, notches shall not exceed 40% of the stud depth.
   (d) Successive notches in the same member shall be spaced a min of 18" apart.
9. Boring:
   (a) Is not permitted of any structural member without prior approval
   (b) In exterior and bearing walls, holes shall not exceed 40% of the stud depth.
   (c) Non-bearing partition walls, may be drilled not greater than 60% of stud depth.
   (d) Successive holes in the same member shall be spaced a minimum of 18" apart.
10. Bearing:
   (a) Provide a min. of 1-1/2" of bearing for all 2x joists and hdrs 4x10 / 6x8 & smaller.
   (b) Provide a min. of 3" of bearing for all beams and hdrs 4x12 / 6x10 & larger, UNO on plans.
   (c) Members bearing on prefabricated hangers are to have full bearing and nailing per manufacturer's specifications.
11. Posts:
   (a) Posts inside walls shall bear on sill plates and shall be continuous between top and bottom plates, unless specifically noted otherwise.
   (b) Provide posts under all beams, girders or double joists equal to the width of the supported member.
   (c) Posts on upper levels are to be stacked on posts of equal size at levels below, unless a larger post is specified on the plans.
   (d) Vertically oriented blocking ("squash blocking") shall be used to fully transfer the post area through floors to foundation. Vertical blocking shall be equal to floor thickness plus 1/16".
   (e) Provide framing into continuous posts without trimmer studs shall be supported in Simpson HUC hangers unless noted otherwise on the plans.
   (f) Posts when isolated, shall be seated in Simpson post or column bases, unless noted otherwise on the plans
12. Roof Framing:
   (a) Provide wood joists, as specified, laid with the crown up and spaced as indicated.
   (b) Provide a minimum of 1-1/2" end bearing unless otherwise shown.
   (c) Provide full depth solid 2x blkg or cross-bridging between the joists at 8' oc max. For floors framed with I joists, refer to the mfg's spec's for blkg requirements.
   (d) Provide full depth solid 2x blocking between the joists under all walls and partitions where the wall or partition is perpendicular to the floor framing (including floors framed with I joists)
   (e) Install plywood sheathing with the face grain across supports, end supports staggered, and the edges of sheets centered over supports. If T&G plywood is used, blocking need not be provided at all plywood edges (UNO per plan). If T&G plywood is not used, blocking shall be provided at all plywood edges. Glue plywood to joists and fully nail with common nails per the plans.
   (f) Plywood panels shall not be less than 4' x 8' except at boundaries and changes in framing direction, where the minimum panel dimension shall be no less than 24", unless all edges of undersized panels are supported by and fastened to framing members or blocking.
13. Floor Framing:
   (a) Provide wood joists, as specified, laid with the crown up and spaced as indicated.
   (b) Provide a minimum of 1-1/2" end bearing unless otherwise shown.
   (c) Provide full depth solid 2x blkg or cross-bridging between the joists at 8' oc max. For floors framed with I joists, refer to the mfg's spec's for blkg requirements.
   (d) Provide full depth solid 2x blocking between the joists under all walls and partitions where the wall or partition is perpendicular to the floor framing (including floors framed with I joists)
   (e) Install plywood sheathing with the face grain across supports, end supports staggered, and the edges of sheets centered over supports. If T&G plywood is used, blocking need not be provided at all plywood edges (UNO per plan). If T&G plywood is not used, blocking shall be provided at all plywood edges. Glue plywood to joists and fully nail with common nails per the plans.
   (f) Plywood panels shall not be less than 4' x 8' except at boundaries and changes in framing direction, where the minimum panel dimension shall be no less than 24", unless all edges of undersized panels are supported by and fastened to framing members or blocking.
14. Shear Walls:
   (a) Refer to plans for all shearwall locations, length type and nailing.
   (b) Refer to Shearwall Schedule on title sheet for additional information.
   (c) Shear wall lengths specified on plans are minimum required.
   (d) Shear walls to be nailed with common nails. All nails to have minimum 3/8" edge distance to panel or framing member.
   (e) Where 3x framing is required per the shear wall schedule, stagger edge nailing.
   (f) Oriented Strand Board (OSB) may be used in lieu of plywood.
   (g) Typical Rim Board/Blocking at Shearwalls shall be 1-3/4" Min. LSL (refer to Engineered Lumber Section for Material Specifications). Refer to Shearwall Schedule per Plan for Min. Rim/Blkg Width Requirements per Transfer Fasteners.

TIMBER / LUMBER

1. All structural lumber shall be Douglas Fir-Larch, S4S and shall conform to the Governing Building Code, section 2303.1.1.
2. The minimum lumber grade of each member shall be as follows (unless specifically noted otherwise on plans and details) :
   (a) 2x studs, blocking, plates:Stud
   (b) 2x joists #2 or better
   (c) 4x4, 4x6, or 6x6 beams or posts #2 or better
   (d) 4x8, 6x8, or larger beams or posts #1 or better

   It is recommended (but not required) that all exposed members be Select Structural or better and free of heart center due to visual characteristics.
3. All lumber in contact with concrete or masonry shall be pressure treated Douglas Fir. Whenever it is necessary to cut, notch, bore or splice pressure treated material, all newly cut surfaces shall be thoroughly painted with the same preservative.
4. Maximum moisture content for all structural members shall not exceed 19%.
5. All plywood sheathing shall be CDX grade (or better) Douglas Fir with exterior glue. All sheathing shall conform to the Governing Building Code and grade-marked by the American Plywood Association (APA). Panel index to be 40/20 for floors and 24/0 for roofs unless specifically noted otherwise on the plans and details.

ENGINEERED LUMBER

1. Glu-laminated Beams (GLB):
   (a) shall have the following properties:

Use	EWS Combination Symbol	Species / Grade	Flexural Stress, Fb (psi)	Modulus of Elasticity, E (ksi)	Horiz. Shear Stress, Fv (psi)	Compression Fc para. (psi)	Compression Fc perp. (psi)
Simple Span Bm.	24F-V4	DF	+2,400/-1,850	1,800	265	1,650	650
Continuous or Cantilever Bm.	24F-V8	DF	+/- 2,400	1,800	265	1,650	650
Columns	2	DF / L2	+/- 1,800	1,300	265	1,600	560

   (b) shall not be notched, cut or drilled without prior approval from the Engineer
   (c) shall have exterior glue and weather-treatment prior to installation
   (d) shall be fabricated by an approved manufacturer & in accordance with ANSI A 190.1
   (e) shall have factory standard camber of 3,500-5,000 ft on beams UNO per Plan
2. Laminated Veneer Lumber (LVL) :
   (a) shall be 1-3/4" minimum thickness with the following minimum properties:
      i. E = 2000 ksi
      ii. Fb = 2600 psi
      iii. Fv = 285 psi
      iv. Fc (parallel) = 2500 psi
      v. Fc (perp.) = 750 psi
      vi. Ft (parallel) = 1500 psi
      vii. Specific Gravity = 0.50
   (b) shall be fabricated by an approved manufacturer
   (c) shall bear a minimum of 3-1/2" on specified supports. Provide full depth solid blocking at all bearing points
   (d) shall be nailed in accordance with mfg's specifications. Unless otherwise approved, nailing into the top edge shall not be spaced any closer than:
      i. 16d @ 6" oc, 10d @ 4" oc, and 8d @ 3" oc
      ii. When nailing must be reduced, stagger rows a minimum of 1/2" apart while maintaining proper edge distances.
   (e) shall be, when comprised of multiple members, connected with 16d nail, 1/2" bolts or 1/4" lag screws in accordance with manufacturer's specifications.
   (f) shall not be cut, notched or drilled without specific written approval of the EOR.
3. Laminated Strand Lumber (LSL) :
   (a) shall be 1-1/4" minimum thickness with the following minimum properties:
      i. E = 1550 ksi
      ii. Fb = 2325 psi
      iii. Fv = 310 psi
      iv. Fc (parallel) = 2500 psi
      v. Fc (perp.) = 800 psi
      vi. Ft (parallel) = 1070 psi
      vii. Specific Gravity = 0.50
   (b) shall be fabricated by an approved manufacturer
   (c) shall bear a minimum of 3-1/2" on specified supports. Provide full depth solid blocking at all bearing points
   (d) shall be nailed in accordance with mfg's specifications. Unless otherwise approved, nailing into the top edge shall not be spaced any closer than:
      i. 16d @ 6" oc, 10d @ 4" oc, and 8d @ 3" oc
      ii. When nailing must be reduced, stagger rows a minimum of 1/2" apart while maintaining proper edge distances.
   (e) shall be, when comprised of multiple members, connected with 16d nail, 1/2" bolts or 1/4" lag screws in accordance with manufacturer's specifications.
   (f) shall not be cut, notched or drilled without specific written approval of the EOR.
4. Parallel Strand Lumber (PSL) :
   (a) shall be 2-1/2" (minimum thickness with the following minimum properties:
      i. E = 2200 ksi
      ii. Fb = 2900 psi
      iii. Fv = 290 psi
      iv. Fc (parallel) = 2900 psi
      v. Fc (perp.) = 750 psi
      vi. Ft (parallel) = 2025 psi
      vii. Specific Gravity = 0.50
   (b) shall be fabricated by an approved manufacturer
   (c) shall bear a minimum of 3-1/2" on specified supports. Provide full depth solid blocking at all bearing points
   (d) shall be nailed in accordance with manufacturer's specifications. Unless otherwise approved, nailing shall not be spaced any closer than:
      i. Narrow face: 16d @ 6" oc, 10d @ 4" oc, and 8d @ 3" oc
      ii. Wide Face: 16d @ 8" oc, and 10d & 8d @ 6" oc
      iii. When nailing must be reduced, stagger rows a minimum of 1/2" apart while maintaining proper edge distances
   (e) shall not be cut, notched or drilled without specific written approval of the EOR.
5. Plywood I Joists:
   (a) type and manufacturer shall be clearly noted on the plans. Substitutions shall not be permitted without prior approval of the Engineer.
   (b) shall be installed in accordance with applicable code approvals and mfg's spec's.
   (c) shall bear a minimum of 1-3/4" at all end supports, and 3-1/2" at intermediate supports. Provide full depth solid blocking at all bearing points.
   (d) shall be installed with intermediate blocking or bridging as specified by the Mfr. Only omit intermediate blocking when specifically allowed by the Mfr.
   (e) shall not be cut, notched or drilled without specific written approval of the EOR.

FASTENERS

1. Nails:
   (a) shall be with "common" nails unless noted otherwise.
   (b) shall not be driven closer than 1/2 their length nor closer than 1/4 of their length to the edge or end of a member, except for sheathing.
   (c) shall be installed in pre-drilled lead holes if necessary to avoid splitting.
   (d) shall be hot-dipped zinc-coated galvanized steel, stainless steel, silicon bronze, or copper when in contact with preservative-treated wood.
      i. When used in exterior applications, nails shall have coating types and weights in accordance with the treated wood or bolt manufacturer's Recs. A Min. of ASTM A653, type G185 zinc-coated galvanized steel (or equiv.) shall be used.
      ii. When used in an interior, dry environment in SBX/DOT or zinc borate preservative-treated wood, plain carbon nails shall be permitted.
   (e) All nailing shall conform to the Governing Building Code, Table 2304.10.2.
2. Lag screws:
   (a) shall be installed into pre-drilled lead holes. Lubricant (or soap) shall be used to facilitate installation and prevent damage to the screws.
   (b) shall be hot-dipped zinc-coated galvanized steel or stainless steel when in contact with preservative-treated wood.
      i. When used in exterior applications, bolts shall have coating types and weights in accordance with the treated wood or bolt manufacturer's rec's. A minimum of ASTM A653, type G185 zinc-coated galvanized steel (or equal) shall be used.
      ii. When used in dry interior environments in SBX/DOT or zinc borate preservative-treated wood, plain carbon screws, nuts, and washers shall be permitted.
3. Bolts:
   (a) shall conform to ASTM A307, UNO specifically on plans and details.
   (b) shall be installed in pre-drilled holes a max of 1/16" larger than the specified bolt dia.
   (c) when installed against wood surfaces, shall have standard washers under the heads and nuts.
   (d) shall be hot-dipped zinc-coated galvanized steel or stainless steel when in contact with preservative-treated wood.
      i. When used in exterior applications, bolts shall have coating types and weights in accordance with the treated wood or bolt manufacturer's rec's. A minimum of ASTM A653, type G185 zinc-coated galvanized steel (or equal) shall be used.
      ii. When used in dry interior environments in SBX/DOT or zinc borate preservative-treated wood, plain carbon screws, nuts, and washers shall be permitted.
4. Anchor Bolts:
   (a) shall be installed at all exterior walls and all interior shear and/or bearing walls.
   (b) shall be 5/8" diameter with 3x3x0.229" steel plate washers at shearwalls.
   (c) shall be 5/8" diameter with 2x2x3/16" steel plate washers at non-shearwalls.
   (d) shall have 7" minimum embedment. (Contractor to coordinate length of bolts with sill plate thicknesses).
   (e) shall conform to ASTM F1554, Grade 36.
   (f) shall be hot-dipped zinc-coated galvanized steel or stainless steel when in contact with preservative-treated wood.
      i. When used in exterior applications, bolts shall have coating types and weights in accordance with the treated wood or bolt manufacturer's rec's. A minimum of ASTM A653, type G185 zinc-coated galvanized steel (or equal) shall be used.
      ii. When used in dry interior environments in SBX/DOT or zinc borate preservative-treated wood, plain carbon screws, nuts, and washers shall be permitted.
   (g) shall not be spaced greater than 72" oc Refer to shearwall schedule for specific anchor bolt spacing requirements.
   (h) shall be placed a maximum of 12" from wall corners, wall ends, and sill plate splices (but not less than 7 dia.) , and a min. of two bolts per piece of sill plate is required.
   (i) shall be secured in place prior to foundation inspection.
5. Powder Actuated Shot Pins:
   (a) shall be installed at all interior non-bearing, non-shearwalls.
   (b) shall be 0.145x3" with 1.5" diameter steel washers.
   (c) shall not be spaced greater than 32" o.c.

Ashley&Vance ENGINEERING, INC.
1729B Telegraph Avenue
Oakland, CA 94612
(510) 473-2221
www.ashleyvance.com
CIVIL • STRUCTURAL

Engineer of Record:

REGISTERED PROFESSIONAL ENGINEER
VICTOR RAMOS
C 86568
08-31-24
CIVIL
STATE OF CALIFORNIA

7211 View
7211 View Avenue
El Cerrito, CA 94530

Revision:

1	Permit Set	2 August 2023
2		
3		
4		
5		
6		
7		
8		

Proj. Engr.: M. Occiano	Phone Ext.: 124
Proj. Mngr.: V. Ramos	Phone Ext.: 128
Date: 2 August 2023	Scale: 1/4"=1'-0"
A&V Job No.: 230215	

STRUCTURAL SPECIFICATIONS & SPECIAL INSPECTIONS

S-1.2

DO NOT SCALE THESE DRAWINGS. Refer to Architectural plans for all dimensions.

Aug 2, 2023
4:24:10 PM

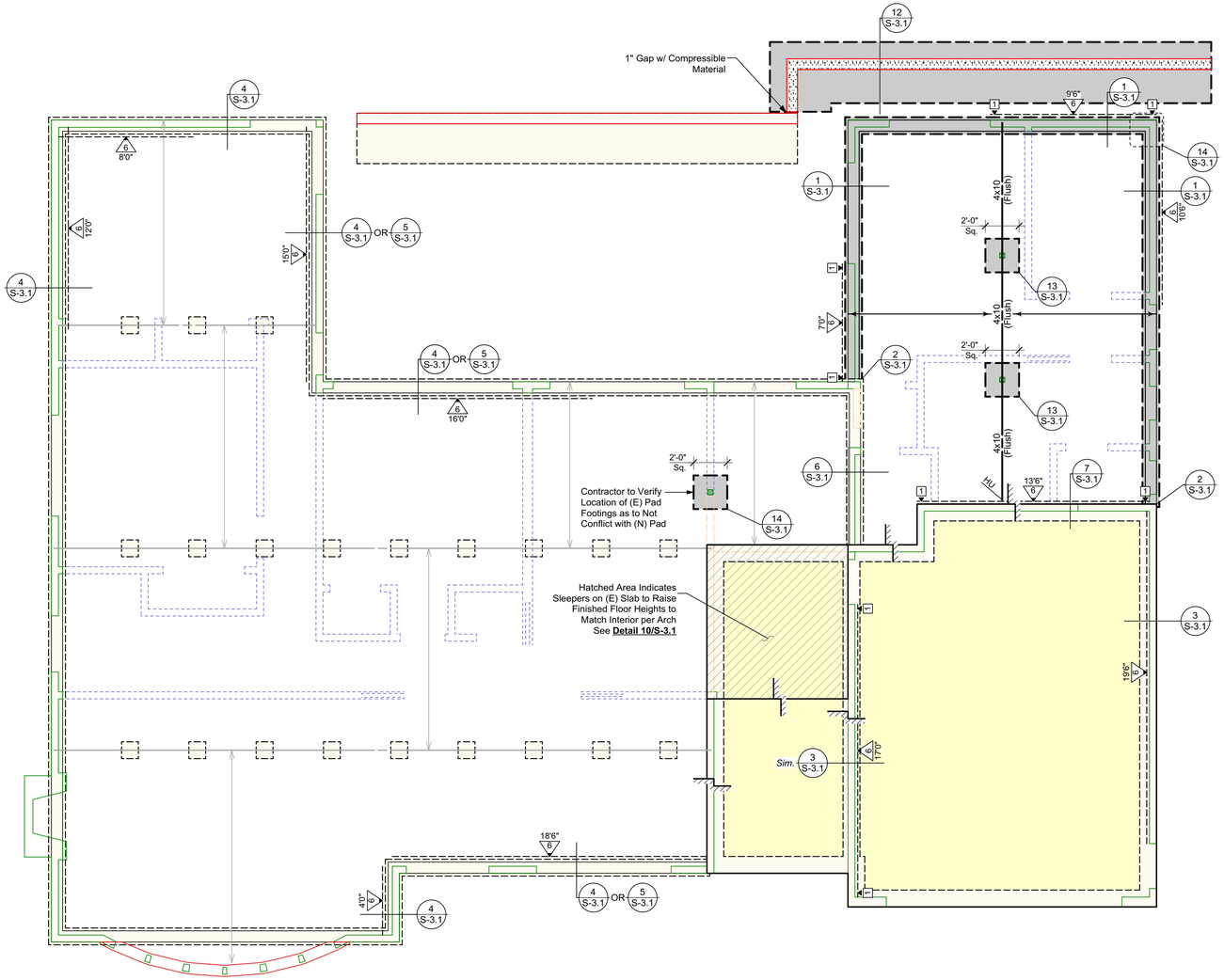

GENERAL FRAMING NOTES

(N) Beams (per Call-out)

(E) Beams (to Remain)

All Lumber 4x6, 6x6 and Smaller to be DF #2 UNO
All Lumber 4x8, 6x8 and Larger to be DF #1 UNO

All Beams to Bear on Plates w/ Indicated Post or Doubler Below UNO

All Hangers Shall be Installed w/ Max. Nailing per Mfr. & Sized for Full Width & Depth of Supported Members, UNO

Floor sheathing to be 3/4" plywood or OSB, T & G, PI 40/20, glued and nailed w/ 10d commons at 6", 6", 12"

Provide wall length continuous full depth solid blocking (where floor joists perpendicular) or double floor joist (where joists parallel) for all walls above.

(N) Floor Joists – 9½" TJI 210 @ 16" o.c. in Simpson ITS Hangers, Typ. (UNO)

(E) Framing (to Remain)

Denotes Step in Framing. Step Ht. & Extent per Arch.

Waterproofing, flashing, & finish details per Architecturals.

See General Notes & Specifications for additional requirements and material specifications.

All dimensions per Architectural plans

Contractor to VERIFY all dimensions w/ Architectural plans PRIOR to commencement of construction.

Contractor shall verify all existing conditions prior to construction & contact Engineer and Architect regarding any discrepancies.

GENERAL FOUNDATION NOTES

Foundations per Governing Building Code, Table 1806.2
At the request of the client (or client's agent), Ashley & Vance Engineering has designed the foundations in conformance with Table 1806.2. If the building official determines that expansive soils are present, or other geologic issues of concern, then they may require that special provisions be made to the foundation design to safeguard against damage due to the expansiveness or due to other geologic issues. If this becomes the situation, all foundation construction must be halted and the client, at their own expense, shall: (a) obtain a soils report prepared by a Soils Engineer licensed in the state of the project; (b) commission Ashley & Vance Engineering to revise the foundation plans and details, and framing plans if necessary, to reflect the recommendations of the soils report; (c) submit the revised plans to the Building Department for approval.

See General Notes & Specifications for additional requirements and material specifications.

All dimensions per Architectural plans

Contractor to VERIFY all dimensions w/ Architectural plans PRIOR to commencement of construction.

Contractor shall verify all existing conditions prior to construction & contact Engineer and Architect regarding any discrepancies.

(E) Foundation & Stem Wall to Remain

(E) Pad Foundation to Remain

(E) Slab-on-Grade to Remain

(N) Foundation & Stem Wall per Details

12" Wide x 8" Deep x 21" Embedment w/ (2) #5 Cont. (UNO)

(N) Pad Foundation per Details Dimensions per Plan w/ #5 @ 12" oc EW, (3) Min.

Denotes Step in Slab-on-Grade or Framing, Step Ht. & Extent per Arch.

All Walls to have Continuous Double Top Plates, All Splices to be per Detail **7/S-1.1**

Wood Framed Wall Above (See S-2.2)

(E) Wood-Framed Wall to be Removed

HOLDOWN SCHEDULE

TYPE	HOLDOWN[1]	MIN. POST	ANCHOR / EMBEDMENT	DETAILS
1	HDU4	(2) 2x	SSTB24 / 21" Min.	(N) Ftg. **8/S-3.1**
2	HDU8	4x	SSTB28L / 25" Min.	(E) Ftg. **9/S-3.1**
3	HDU11	6x6 or 4x8	SB1x30 / 24" Min.	
4	HDU14	6x6 or 4x8	SB1x30 / 24" Min.	
5	HD19	6x6 or 4x8	PAB10 x 36" / 30" Min.	

FOOTNOTES:
1. Shared holdowns to be installed per detail **10/S-1.1**, *Typical Shearwall Intersections*, (UNO)

SHEARWALL SCHEDULE

DESCRIPTION					NAILING[1]		TRANSFERS[2]					
NO.	MATERIALS	DBL. SIDED	SILL PLATE	PANEL B'DRY	SIZE	SPC'G	5/8"Ø[3] AB	SDS[4] Screw	SDWS[5] Screw	A35, LTP4[6,7,8] or LTP5	RBC	16d[9]
6	15/32" Struc. 1 Ply.	N	2x	2x	10d	6"	48"	9"	12"	16"	12"	4"
4	15/32" Struc. 1 Ply.	N	2x	3x	10d	4"	35"	6"	8"	11"	8"	3"
3	15/32" Struc. 1 Ply.	N	2x	3x	10d	3"	26"	5"[10]	6"[10]	8"	6"	-
2	15/32" Struc. 1 Ply.	N	2x	3x	10d	2"	20"	4"[10]	4"[10]	6"	5"	-
14	15/32" Struc. 1 Ply.	Y	3x	3x	10d	4"	22"	3"[10]	4"[10]	5"	-	-
33	15/32" Struc. 1 Ply.	Y	3x	3x	10d	3"	17"	2"[10,11]	3"[10,11]	4"[12]	-	-
22	15/32" Struc. 1 Ply.	Y	3x	3x	10d	2"	13"	2"[10,11]	2"[10,11]	3"[12]	-	-

FOOTNOTES:
1. All nails to be COMMONS. **DO NOT** use box type nails. All "field" nailing to be 12"oc, UNO. Penetration shall be 1-1/2" Min. in framing.
2. All transfers to be installed into min. 1-1/2" thick members, UNO. Where clips are spaced less than 6" oc, stagger clips on each side of wall.
3. All shear walls to have 5/8" anchor bolts, embeded 7" into concrete foundations, with 3"x3"x0.229" thick plate washers, minimum. Washers may be slotted (slot length not to exceed 1-3/4") w/ standard cut washer placed between nut and plate washer. Washers shall extend within 1/2" of the edge of the bottom plate on the sheathed side. At walls sheathed on 2 sides, plate washers shall be alternated to each side of plate. [Governing Bulding Code, Section 2308.3.1] [AF&PA SDPWS 4.3.6.4.3]
4. Simpson SDS 1/4"x5" Screws through 2x sill, or SDS 1/4"x8" Screws through 3x sill or double plates. Install into minimum 1-3/4" thick members (rim and/or blocking). [ICC ESR 2236]
5. Simpson SDWS 0.22"x5" Screws through 2x sill, or SDWS 0.22"x8" Screws through 3x sill or double plates. Install into minimum 1-3/4" thick members (rim and/or blocking). [ICC ES AC233]
6. See details for permitted transfer clip types and locations.
7. Orient LTP4 and LTP5 clips such that the long dimension is horizontal.
8. Where LTP4 clips are installed over shear wall sheathing, fasten with full length 8d common nails.
9. 16d common nails through the sill plate to rim member or blocking.
10. Install screws into 3-1/2" wide continuous member, staggered 1-1/2" apart.
11. Install screws into Glulams or solid sawn member. LSL, LVL, or PSL members are NOT acceptable, UNO.
12. Provide both A35 and LTP4 clips on opposite sides of shearwall in order to acheive net spacing requirement.

Ashley&Vance ENGINEERING, INC.
1729B Telegraph Avenue
Oakland, CA 94612
(510) 473-2221
www.ashleyvance.com
CIVIL • STRUCTURAL

Engineer of Record:

REGISTERED PROFESSIONAL ENGINEER VICTOR RAMOS C 86568 06-30-24 CIVIL STATE OF CALIFORNIA

7211 View
7211 View Avenue
El Cerrito, CA 94530

Revision:

1	Permit Set	2 August 2023

Proj. Engr.: M. Occiano Phone Ext.: 124
Proj. Mngr.: V. Ramos Phone Ext.: 128
Date: 2 August 2023 Scale: 1/4"=1'-0"
A&V Job No.: 230215

FOUNDATION PLAN

S-2.1

DO NOT SCALE THESE DRAWINGS. *Refer to Architectural plans for all dimensions.*

Aug 2, 2023
2:49:13 PM

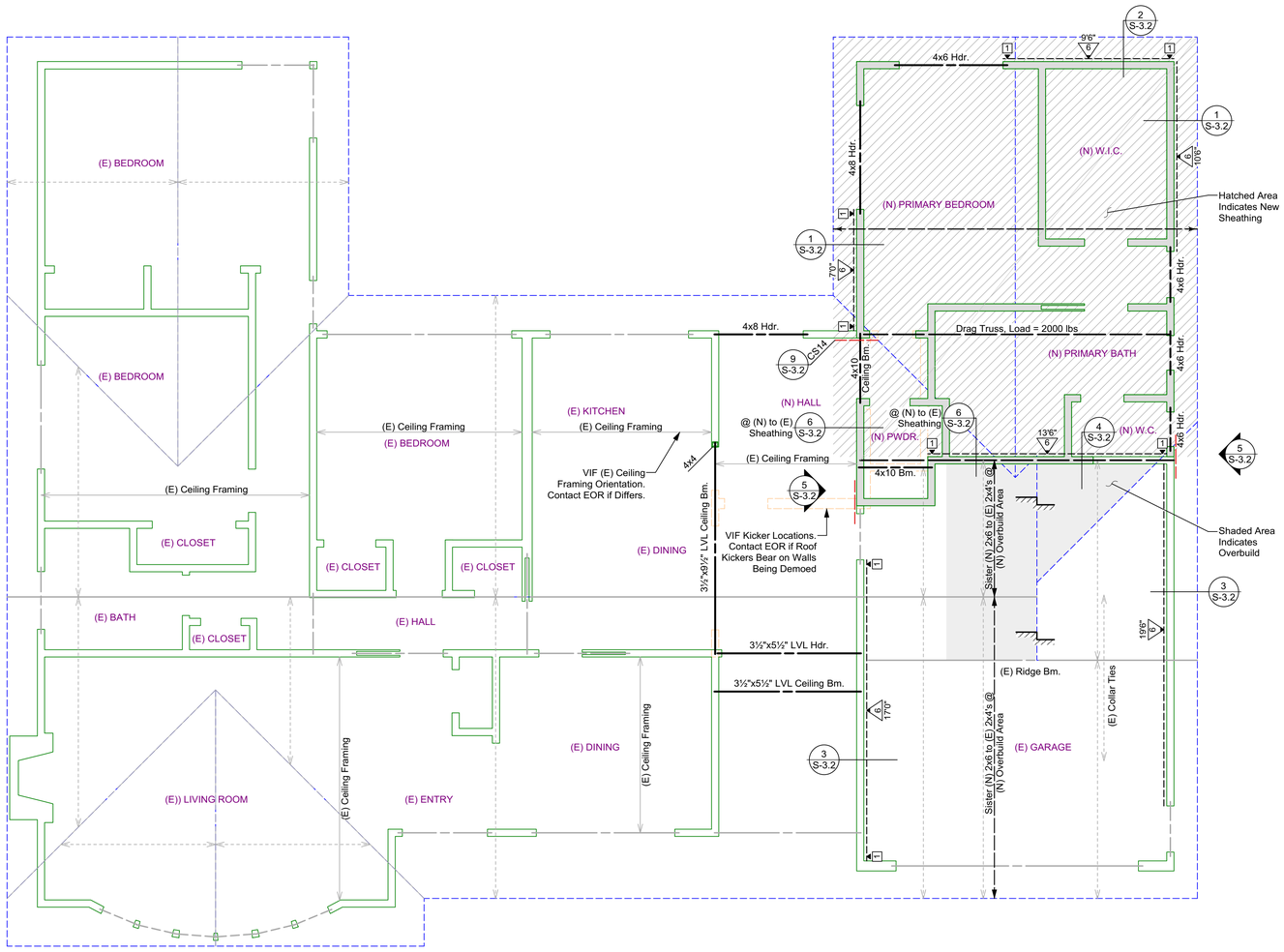

Denotes Approximate Areas of Overbuild. Overbuild Framing Consists of 2x8 Ridge, 2x6 Rafters, with 2x4 Vertical Supports @ 48" o.c., Staggered.
See Details **7/S-3.2** and **8/S-3.2**.

TRUSS DRAWINGS

Manufactured truss (i.e. prefabricated truss) drawings are required. Truss drawings must be received by the Architect (or designer) in time to ensure adequate coordination with Structural Engineer. Refer to the Material Specifications for additional requirements. Truss drawings shall include (but are not limited to) the following:

1. All connections related to trusses (i.e. truss to truss, conventional framing to truss, truss to top plate, etc.
2. All related bracing for trusses.
3. Any camber needed to minimize excessive deflection.
4. Adequate design to prevent any lateral movement.
5. Adequate design to sustain any vertical load.
6. The builder agrees to hold the Architect (or Designer) & the Engineer harmless for omissions due to delayed receipt of truss drawings.

All truss engineering, drawings, truss types, and detailed shop drawings shall be approved by the project engineer prior to the installation of the trusses.

GENERAL FRAMING NOTES

(N) Beams (per Call-out)

(E) Beams (to Remain)

All Lumber 4x6, 6x6 and Smaller to be DF #2 UNO
All Lumber 4x8, 6x8 and Larger to be DF #1 UNO

All Beams to Bear on Plates w/ Indicated Post or Doubler Below UNO

All Hangers Shall be Installed w/ Max. Nailing per Mfr. & Sized for Full Width & Depth of Supported Members, UNO

Roof sheathing to be 5/8" plywood or OSB, PI 40/20, nailed w/ 10d commons at 6", 6", 12"

Pre-Fabricated Roof Trusses (by Others) @ 24" oc
All Truss to Truss Hangers per Mfr., Typ. (UNO)

(N) Ceiling Joists -- 2x6 D.F. #2 @ 12" oc
in Simpson LUS Hangers. (UNO)

(N) Roof Joists -- 2x6 D.F. #2 per Plan
in Simpson LUS Hangers. (UNO)

(E) Framing (to Remain)

Waterproofing, flashing, & finish details per Architecturals.

See General Notes & Specifications for additional requirements and material specifications.

All dimensions per Architectural plans

Contractor to VERIFY all dimensions w/ Architectural plans PRIOR to commencement of construction.

Contractor shall verify all existing conditions prior to construction & contact Engineer and Architect regarding any discrepancies.

WALL SCHEDULE

Stud wall locations per Architecturals.

(E) Wood-Framed Wall to be Removed

(E) Wood-Framed Wall to Remain

(N) Wood-Framed Wall

Wall Thickness per Arch.
Min. 2x4 D.F. Stud @ 16" o.c.

All Walls to have Continuous Double Top Plates, All Splices to be per Detail **7/S-1.1**

HOLDOWN SCHEDULE

TYPE	HOLDOWN[1]	MIN. POST	ANCHOR / EMBEDMENT	DETAILS
1	HDU4	(2) 2x	SSTB24 / 21" Min.	(N) Ftg. **8/S-3.1**
2	HDU8	4x	SSTB28L / 25" Min.	(E) Ftg. **9/S-3.1**
3	HDU11	6x6 or 4x8	SB1x30 / 24" Min.	
4	HDU14	6x6 or 4x8	SB1x30 / 24" Min.	
5	HD19	6x6 or 4x8	PAB10 x 36" / 30" Min.	

FOOTNOTES:
1. Shared holdowns to be installed per detail **10/S-1.1**. *Typical Shearwall Intersections*, (UNO)

SHEARWALL SCHEDULE

DESCRIPTION					NAILING[1]		TRANSFERS[2]					
NO.	MATERIALS	DBL. SIDED	SILL PLATE	PANEL B'DRY	SIZE	SPC'G	5/8"Ø[3] AB	SDS[4] Screw	SDWS[5] Screw	A35, LTP4[6,7,8] or LTP5	RBC	16d[9]
6	15/32" Struc. 1 Ply.	N	2x	2x	10d	6"	48"	9"	12"	16"	12"	4"
4	15/32" Struc. 1 Ply.	N	2x	3x	10d	4"	35"	6"	8"	11"	8"	3"
3	15/32" Struc. 1 Ply.	N	2x	3x	10d	3"	26"	5"[10]	6"[10]	8"	6"	-
2	15/32" Struc. 1 Ply.	N	2x	3x	10d	2"	20"	4"[10]	4"[10]	6"	5"	-
44	15/32" Struc. 1 Ply.	Y	3x	3x	10d	4"	22"	3"[10]	4"[10]	5"	-	-
33	15/32" Struc. 1 Ply.	Y	3x	3x	10d	3"	17"	2"[10,11]	3"[10,11]	4"[12]	-	-
22	15/32" Struc. 1 Ply.	Y	3x	3x	10d	2"	13"	2"[10,11]	2"[10,11]	3"[12]	-	-

FOOTNOTES:
1. All nails to be COMMONS. **DO NOT** use box type nails. All "field" nailing to be 12"oc, UNO. Penetration shall be 1-1/2" Min. in framing.
2. All transfers to be installed into min. 1-1/2" thick members, UNO. Where clips are spaced less than 6" oc, stagger clips on each side of wall.
3. All shear walls to have 5/8" anchor bolts, embeded 7" into concrete foundations, with 3"x3"x0.229" thick plate washers, minimum. Washers may be slotted (slot length not to exceed 1-3/4") w/ standard cut washer placed between nut and plate washer. Washers shall extend within 1/2" of the edge of the bottom plate on the sheathed side. At walls sheathed on 2 sides, plate washers shall be alternated to each side of plate. [Governing Bulding Code, Section 2308.3.1] [AF&PA SDPWS 4.3.6.4.3]
4. Simpson SDS 1/4"x5" Screws through 2x sill, or SDS 1/4"x8" Screws through 3x sill or double plates. Install into minimum 1-3/4" thick members (rim and/or blocking). [ICC ESR 2236]
5. Simpson SDWS 0.22"x5" Screws through 2x sill, or SDWS 0.22"x8" Screws through 3x sill or double plates. Install into minimum 1-3/4" thick members (rim and/or blocking). [ICC ES AC233]
6. See details for permitted transfer clip types and locations.
7. Orient LTP4 and LTP5 clips such that the long dimension is horizontal.
8. Where LTP4 clips are installed over shear wall sheathing, fasten with full length 8d common nails.
9. 16d common nails through the sill plate to rim member or blocking.
10. Install screws into 3-1/2" wide continuous member, staggered 1-1/2" apart.
11. Install screws into Glulams or solid sawn member. LSL, LVL, or PSL members are NOT acceptable, UNO.
12. Provide both A35 and LTP4 clips on opposite sides of shearwall in order to acheive net spacing requirement.

Ashley&Vance ENGINEERING, INC.
1729B Telegraph Avenue
Oakland, CA 94612
(510) 473-2221
www.ashleyvance.com
CIVIL • STRUCTURAL

Engineer of Record:

REGISTERED PROFESSIONAL ENGINEER
VICTOR RAMOS
C 86568
06-30-24
CIVIL
STATE OF CALIFORNIA

7211 View

7211 View Avenue
El Cerrito, CA 94530

Revision:

1	Permit Set	2 August 2023
2		
3		
4		
5		
6		
7		
8		
9		

Proj. Engr.: M. Occiano Phone Ext.: 124
Proj. Mngr.: V. Ramos Phone Ext.: 128
Date: 2 August 2023 Scale: 1/4"=1'-0"
A&V Job No.: 230215

ROOF FRAMING PLAN

S-2.2

DO NOT SCALE THESE DRAWINGS. Refer to Architectural plans for all dimensions.

Aug 2, 2023
2:09:14 PM

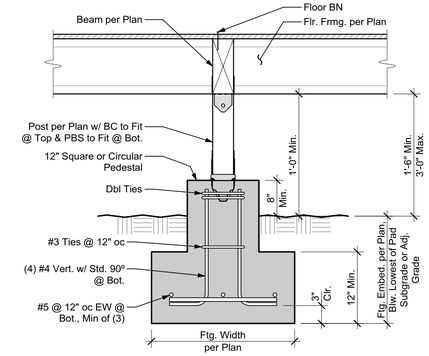

13 TYPICAL INTERIOR PAD FOOTING

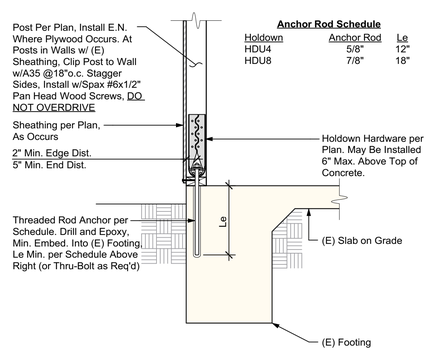

9 HOLDOWN AT EXISTING FOOTING

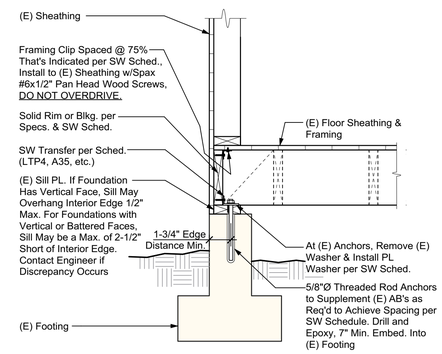

5 SHEAR WALL AT EXISTING FOOTING

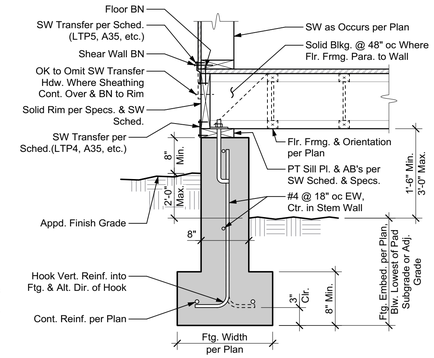

1 EXTERIOR RAISED FOUNDATION

17 NOT USED

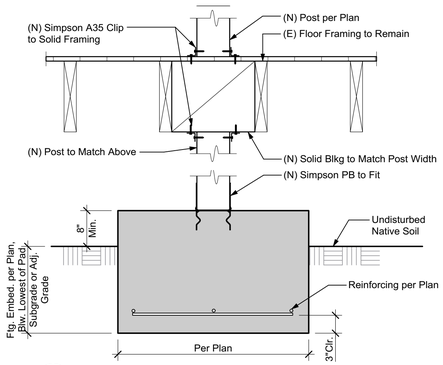

14 PAD FOUNDATION

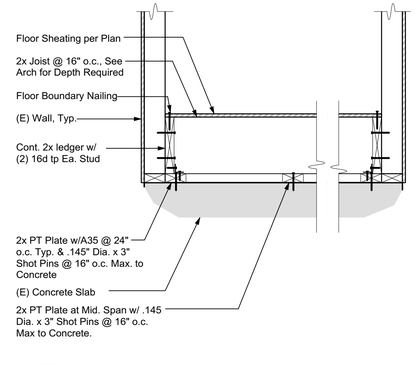

10 PLATFORM FRAMING

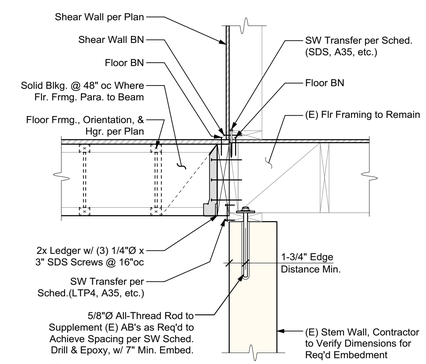

6 SHEAR WALL TO EXISTING STEM WALL

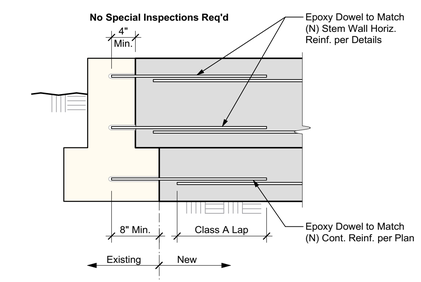

2 NEW FDN. TO EXISTING FDN.

18 NOT USED

19 NOT USED

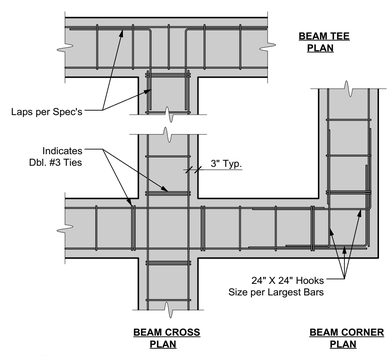

15 BEAM TO BEAM CONNECTIONS

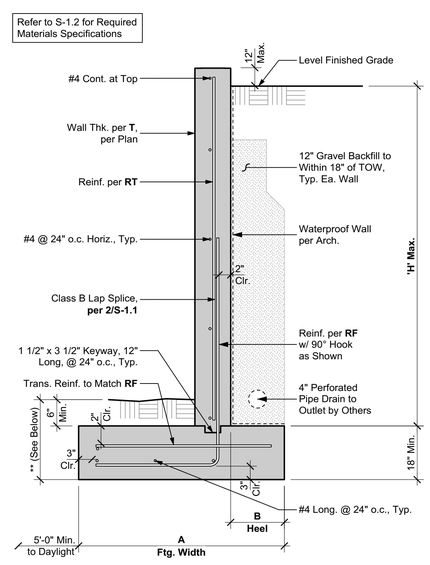

H	A	B	RF	T	RT
4'-0"	3'-9"	1'-0"	#5 @ 16"	0'-8"	#5 @ 16"

** Embed Wall Footing into approved material per Soils Report. Contact EOR if retained heights exceed those on this schedule.

12 RETAINING WALL

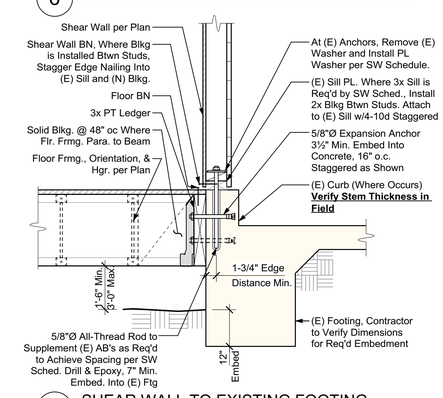

7 SHEAR WALL TO EXISTING FOOTING

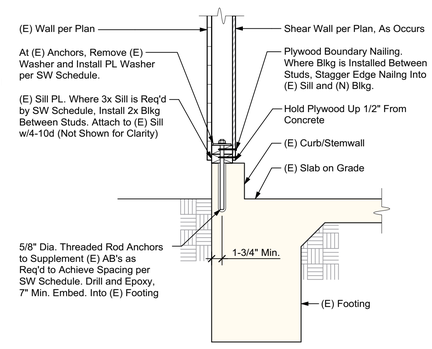

3 SHEAR WALL AT EXISTING FOOTING

20 NOT USED

16 NOT USED

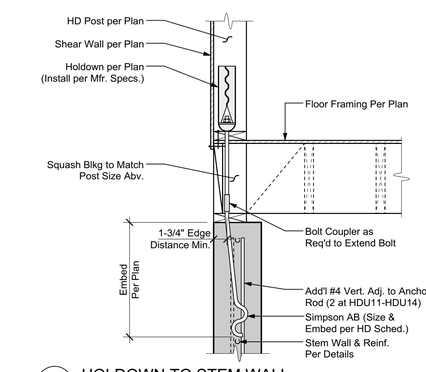

8 HOLDOWN TO STEM WALL

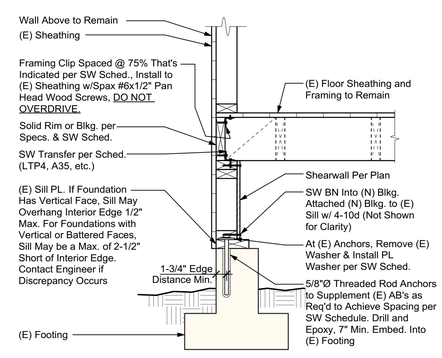

4 SHEAR WALL AT EXISTING FOOTING

Ashley&Vance ENGINEERING, INC.
1729B Telegraph Avenue
Oakland, CA 94612
(510) 473-2221
www.ashleyvance.com
CIVIL • STRUCTURAL

Engineer of Record:

REGISTERED PROFESSIONAL ENGINEER VICTOR RAMOS C 86568 06-30-24 CIVIL STATE OF CALIFORNIA

7211 View
7211 View Avenue
El Cerrito, CA 94530

Revision:

1	Permit Set	2 August 2023
2		
3		
4		
5		
6		
7		
8		

Proj. Engr.: M. Occiano	Phone Ext.: 124
Proj. Mngr.: V. Ramos	Phone Ext.: 128
Date: 2 August 2023	Scale: 1/4"=1'-0"
A&V Job No.: 230215	

STRUCTURAL DETAILS

S-3.1

DO NOT SCALE THESE DRAWINGS. Refer to Architectural plans for all dimensions.

Aug 2, 2023 2:49:14 PM

17 NOT USED

18 NOT USED

19 NOT USED

20 NOT USED

13 NOT USED

14 NOT USED

15 NOT USED

16 NOT USED

Strap	'N' 10d/16d	End Length
CS16	20 -	11 in.
CS14	30 -	15 in.
CMSTC16	- 25	20 in.
CMST14	- 28	26 in.
CMST12	- 37	33 in.

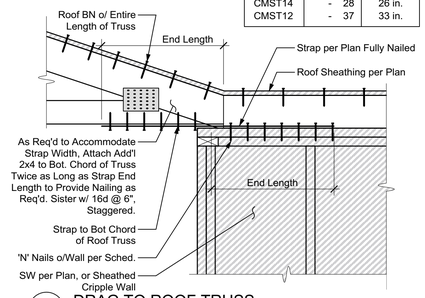

9 DRAG TO ROOF TRUSS

10 NOT USED

11 NOT USED

12 NOT USED

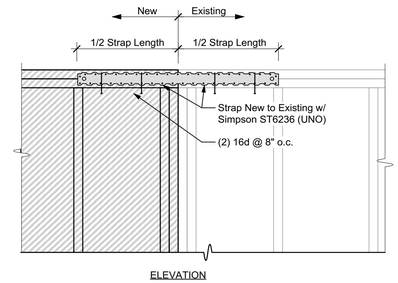

5 NEW WALL TO EXISTING WALL

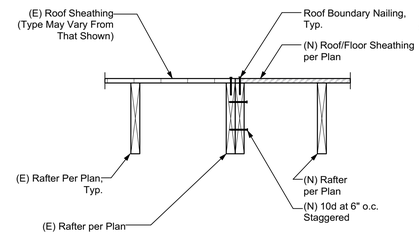

6 NEW FRAMING TO EXISTING

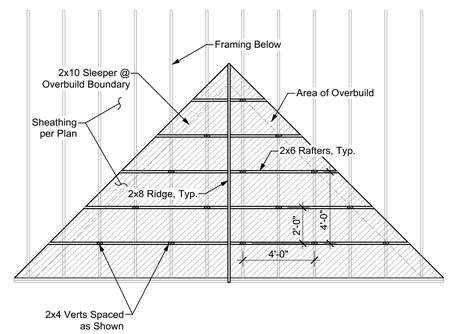

7 TYP. OVERBUILD FRAMING

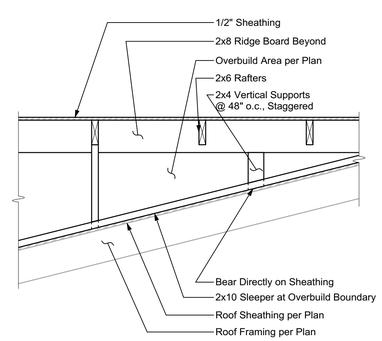

8 TYP. OVERBUILD FRAMING

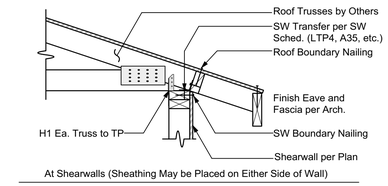

1 SHEAR TRANSFER TO TRUSSES

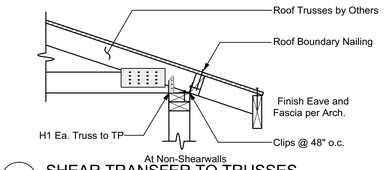

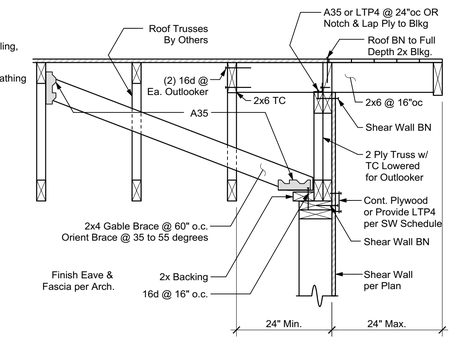

2 SHEARWALL AT GABLE END

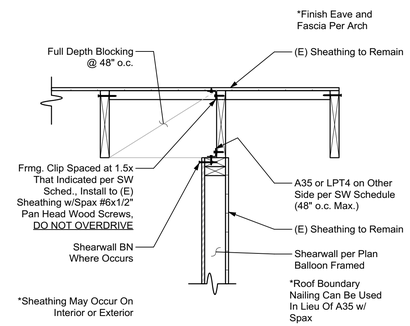

3 SHEAR TRANSFER AT (E) GABLE END

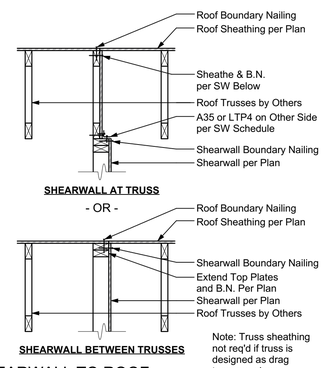

Note: Truss sheathing not req'd if truss is designed as drag truss per plans.

4 SHEARWALL TO ROOF

Ashley&Vance ENGINEERING, INC.
1729B Telegraph Avenue
Oakland, CA 94612
(510) 473-2221
www.ashleyvance.com
CIVIL • STRUCTURAL

Engineer of Record:

REGISTERED PROFESSIONAL ENGINEER VICTOR RAMOS No. 86568 Exp. 06-30-24 CIVIL STATE OF CALIFORNIA

7211 View

7211 View Avenue
El Cerrito, CA 94530

Revision:

1	Permit Set	2 August 2023
2		
3		
4		
5		
6		
7		
8		

Proj. Engr.: M. Occiano	Phone Ext.: 124
Proj. Mngr.: V. Ramos	Phone Ext.: 128
Date: 2 August 2023	Scale: 1/4"=1'-0"
A&V Job No.: 230215	

STRUCTURAL DETAILS

S-3.2

DO NOT SCALE THESE DRAWINGS. Refer to Architectural plans for all dimensions.

Aug 2, 2023
2:08:15 PM